POWER-GENEX®

Progressive!

All innovation
on driving your valve automation

SIL3 · IECEx · Ex · EAC · CE · Ex NEPSI · PROFIBUS · Fieldbus Foundation · HART FIELD COMMUNICATIONS PROTOCOL · UKAS

Headquarters

Worldwide Sales Network

We are working at the nearest places where you can get in touch with us easily

POWER-GENEX®

ASD-5000 Series Smart Valve Positioner

(Diagnostics Positioner)

ASD-5000 Positioner Series

ASD-5000 is the smart valve positioner which offers incomparable and stable control processing performance and advanced self-diagnostics for control valves. ASD-5000 has an outstanding durability and it has an improved control performance thanks to non-contact sensors with accuracy. ASD-5000 has a wide and multi-lingual display that provides diverse information and a current control situation with graph.

Features

Easy to use

- Quick auto-calibration by pushing one button
- Detecting RA (reverse acting) or DA (direct acting) automatically regardless of wrong air connections
- By-pass (auto/manual screw)
- Logical trend and histogram collection
- Providing a mounting bracket to meet IEC 60534-6-1 for linear valves
- Supporting a NAMUR mounting pattern VDI/VDE3845 (IEC60534-6-2) and providing a multi-size mounting bracket for rotary valves

Improved display performance

- Wide and multi-lingual full text graphical TFT LCD with high-resolution and clear graphic images
- Provides 3 steps to re-size information on LCD
- Shows a control history trend, a logical trend and histogram collection

Various communications

- HART (Ver. 7)
- Profibus PA
- Foundation Fieldbus

Non-contact position sensor

- Magnetic position sensor (MPS, non-contact)
- Resistant to vibration
- Excellent temperature characteristics

Improved durability

- Vibration and impact tolerant
- Resistant to dirty air and humidity

Diagnostics

- Self-diagnostics
- Advanced diagnostics with 4 x pressure sensor
- Valve signature
- Valve step response
- Partial stroke test (PST)

Options

- Output position transmitter (4 - 20 mA)
- 2 x 24VDC software limit switch or 2 x SPDT mechanical limit switch
- Position indication beacon (flat or dome)
- Stainless steel body (316SS)
- Intrinsically safe Ex ia IIC
- HART communication
- Profibus PA communication
- Foundation Fieldbus communication

Solid body design

- Aluminum housing / Epoxy-coated
- High corrosion-resistant stainless steel 316 body
- Protection class : IP66

Non-contact sensor providing high durability and improved control performance

- Higher durability than a feedback lever type
- Reduced hysteresis
- Provides a remarkable control performance under a harsh working environment with vibration

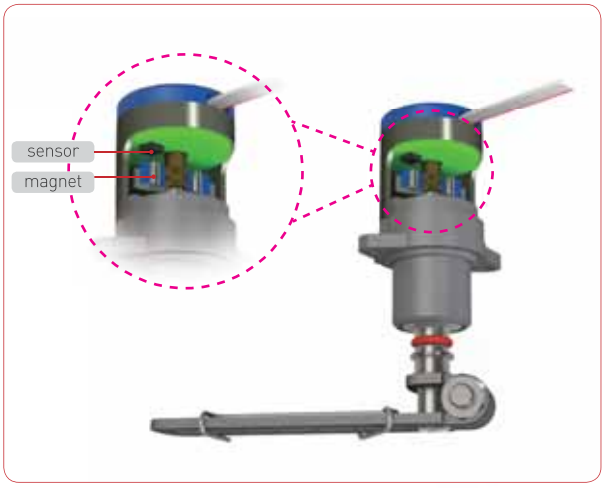

< MPS - Magnetic Position Sensor >

Easy and quick auto-calibration

Quick auto-calibration by pushing one button provides optimal positioner setting easily and fast.

Improved display

ASD positioner has a wide display with high visibility and it's possible to re-size information with 3 steps and available to show a control graph on LCD.

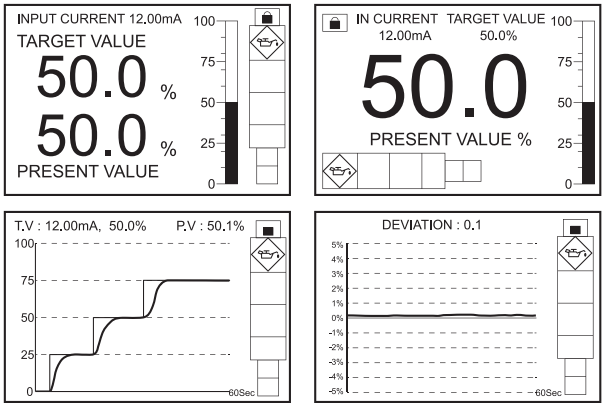

Multi-lingual display

English, Chinese and Korean are available on LCD and more languages are planned to add through a continuous update

- MODE
  - DISPLAY VARIABLE
  - MANUAL
  - MONITORING
  - AUTO TUNE
  - PARAMETERS
  - TEST

- 모 드
  - 표시 변수
  - 수동 제어
  - 모니터링
  - 오토 튠
  - 파라메터
  - 테스트

- 模 式
  - 显示设置
  - 手动模式
  - 监测模式
  - 自动模式
  - 参数
  - 测试

Self-diagnostics

Advanced self-diagnostics is performed with pressure sensors installed inside of ASD positioner and results from self-diagnostics can be shown on LCD or transmitted over communication according to NAMUR NE107 standard.

Failure | Out of Specification | Maintenance Required | Check Function

Offline diagnostics (self-diagnostics)

Failure

- Loop current failure
- Loop voltage failure
- Supply air failure
- Auto calibration failure

Out of Specification

- Position high / low limit
- Temperature high / low limit
- Supply air high / low limit

Maintenance Required

- Not calibrated
- Use small angle
- Deviation error
- TUNE-point adjust error

Check Function

- PST Failure
- Use SHAPE parameter
- Valve friction high
- Check EMI / RFI

Online FDT DTM (Device Type Manager)

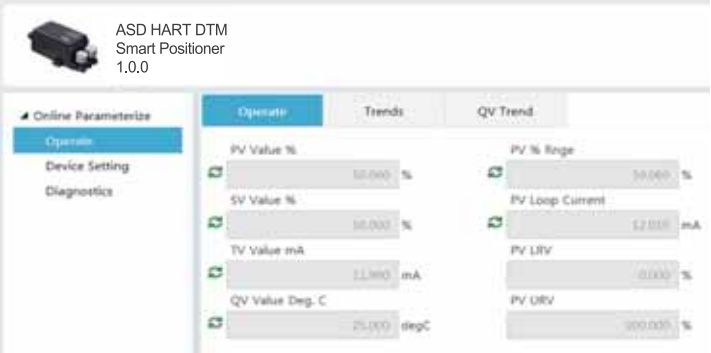

It's possible to make use of advanced diagnostics of ASD positioner by using an online DTM.

※ Available only with HART communication option

Online diagnostics (Advanced diagnostics)

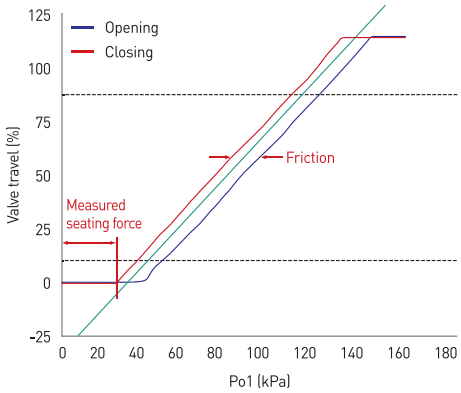

- **Valve signature**

Valve signature is the result which records air pressure change and valve position according to ramp input signals. The following values about performance of valve control are obtained from this valve signature and it's possible to confirm a current valve status (integrity)

a. Seating force
b. Friction
c. Spring range

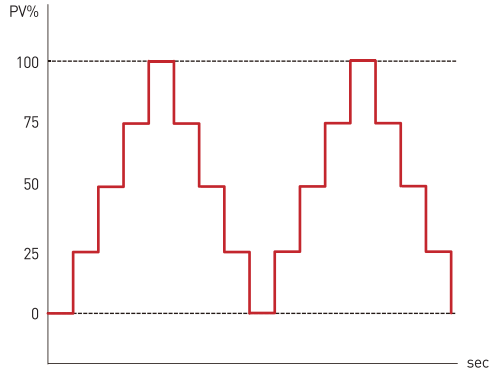

- **Valve step response**

This is the result which shows a valve control status with on-off signals or on every 25% step.

a. ON-OFF step
b. 25% step

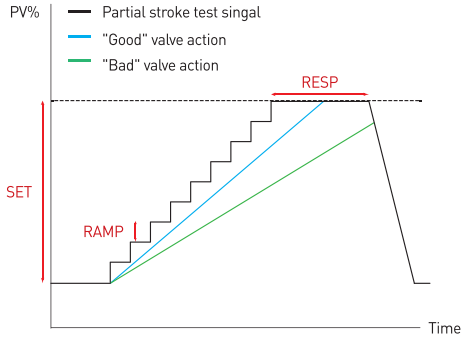

- **PST (Partial Stroke Test)**

This is the function which records changes by operating the positioner with the set values automatically without influencing system in an automatic control mode.

It's possible to confirm a valve status (integrity) by comparing the past one with the present one.

Technical specifications
ASD-5000 Smart valve positioner

Input	
Standard	
Supply power	4 to 20mA, Loop powered
Max.	50mA
Min.	3.6mA
Load voltage at 20mA	6.8V
Impedance at 20mA	340 Ω
HART Communication ver. 7	
- Without advanced diagnostics	
Load voltage at 20mA	7.8V
Impedance at 20mA	390 Ω
- With advanced diagnostics (with 4 pressure sensors)	
Load voltage at 20mA	9.5V
Impedance at 20mA	475 Ω
Profibus PA & Foundation Fieldbus	
Supply power	Bus power 9 – 32VDC
Current Consumption	Profibus - 15mA
	Foundation Fieldbus - 16mA

Output	
Range	0 – 7 bar (0 – 100 psi)
Air consumption	2.5 L.P.M
	at 1.4 bar (20 psi) supply pressure
	3.0 L.P.M
	at 6 bar (90 psi) supply pressure
Air Capacity	250 L.P.M
	at 1.4 bar (20 psi) supply pressure
	300 L.P.M
	at 6 bar (90 psi) supply pressure

Air Supply	
Instrument air	free of oil, water and dust acc. to
	DIN/ISO 8573-1 pollution and oil
	content according to Class 3
Supply pressure	1.4 to 7 bar (20 to 100 psi)

Applicable actuators	
Operating type	Linear, Rotary, Remote
Acting type	Single, Double
Action	direct action(DA), reverse action(RA)
Linkage type	
Travel range	Linear : 10 – 120 mm
	Rotary : 30˚– 150˚ rotation angle
Linkage-less type	
Travel range	Linear : 10 – 120 mm
	Rotary : 30˚– 150˚ rotation angle
	Remote : 3, 5, 10, 15, 20, 30m
※ Other travel range on request	

Characteristics	
Linearity	< ±0.5% F.S
Sensitivity	< ±0.3% F.S
Hysteresis	< ±0.3% F.S
Repeatability	< ±0.2% F.S
Performance characteristic	Linear, Shape (EQ%, Quick), User set

Enclosure	
Material	Aluminum die-cast + Epoxy-coated
	316 Stainless steel housing
Protection class	IP66
Pneumatic connections	PT 1/4
	NPT 1/4
Electrical connections	PF 1/2
	NPT 1/2
	M20 x 1.5
Weight	2.4 kg – Aluminum die-cast
	4.5 kg – Stainless steel 316

Hazardous area approvals	
IECEx	Intrinsically Safe, Ex ia IIC T6/T5 Gb Ex ia IIIC T85 C,T100 C Db
ATEX	
KCs	
CCC / EAC	

Environmental influences	
Ambient temperature	Standard : -30 to 80℃ (-22 to 176℉)
Operating temperature of LCD	-30 to 80℃ (-22 to 176℉)
Vibration	2G, 5 to 400 Hz
Humidity	The dew point should be at least 10℃ lower than the temperature of this device.

Feedback options	
Position Transmitter (Output signal)	
Output signal	4-20mA, 2-wired
Supply voltage	12-30VDC
Load Limitation	0 – 1000 Ω (Normally 650Ω at 24VDC)
Linearity	± 0.5%
Limit switches – Programmable software limit switches	
Type	2 x software limit switch
Rating	24VDC
Limit switches – Micro switches	
Type	2 x SPDT
Rating	5A @ 220VAC
Contact	Silver alloy
Ambient temperature	-30 - +85℃
Limit switches – P&F sensor (SJ2-SN)	
Type	NAMUR NC
Supply voltage	Nominal 8.2VDC (5 – 11 VDC)
Current consumption	Target not detected > 3mA
	Target detected < 1mA
Ambient temperature	-40 - +100℃

Mounting brackets	
Linear type	IEC 60534-6-1
Rotary type	IEC 60534-6-2

ASD-5000 Series How to order

				①	②	③		④	⑤	⑥	⑦	⑧	⑨	⑩	⑪	⑫		⑬	⑭
ASD-5000 Series positioner			ASD - 5	X	X	X	-	X	X	X	X	X	X	X	X	X	-	X	X
1. Body material	Aluminum die-cast			0															
	Stainless steel 316			1															
2. Actuator operation	Linear				0														
	Rotary				1														
3. Feedback type	Linkage type					0													
	Linkage-less type					1													
	Remote type					2													
4. Hazardous area & Protection	Intrinsically Safe, Ex ia IIC							I											
	Ex ia IIIC T85 C,T100 C																		
	Weatherproof to IP66							W											
5. Feedback size	Linkage type	Linear type (ASD-5x00, 5x02)	Stroke 10 – 60mm						B										
			Stroke 10 - 120mm						C										
			*Others on request																
		Rotary type (ASD-5x10, 5x12)	Fork lever						F										
			NAMUR shaft						N										
	Linkage -less type	Linear type (ASD-5x01, 5x02)	Stroke 10 – 120mm						B										
			*Others on request																
		Rotary type (ASD-5x11, 5x12)	M6 Connector						6										
			M8 Connector						8										
6. Gauge (Out1, Out2 gauge)	6 bar (90 psi)									1									
	10bar (150 psi)									2									
7. Beacon indicator	None										N								
	Flat indicator										F								
	Beacon indicator (90°)										Y								
8. Position feedback	None											N							
	Position transmitter (4-20mA)											O							
	Advanced diagnostics + position transmitter (in pending)											A							
9. Limit switches	None												N						
	2 x 24VDC software limit switch												L						
	2 x micro switch (SPDT)												S						
	2 x P&F proximity sensor												P						
10. Communication	None													N					
	HART communication													H					
	Profibus PA (in pending)													P					
	Foundation Fieldbus(in pending)													F					
11. Connection threads (pneumatic – electrical)	PT(Rc) 1/4 – PF(G) 1/2														3				
	NPT 1/4 – NPT 1/2														4				
	PT(Rc) 1/4 – M20x1.5														5				
	NPT 1/4 – M20x1.5														6				
	※ Others on request																		
12. Mounting bracket	None															N			
	Linear type / IEC 60534-6-1															L			
	Rotary type / IEC 60534-6-2															R			
13. Remote cable (only for ASD-5002)	3, 5, 10, 20, 30m																	X	
14. Temperature	Standard (-30 - +80℃)																		Blank
	Low temperature (-40 - +80℃)																		LT

Dimensions (Linkage type)

ASD-5000 Linear type

ASD-5010 Rotary type

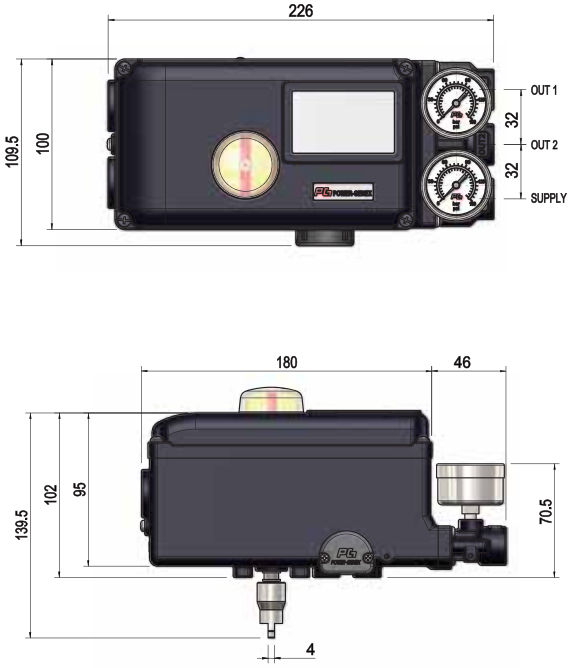

Dimensions (Linkage - less type)

ASD-5001 Linear type

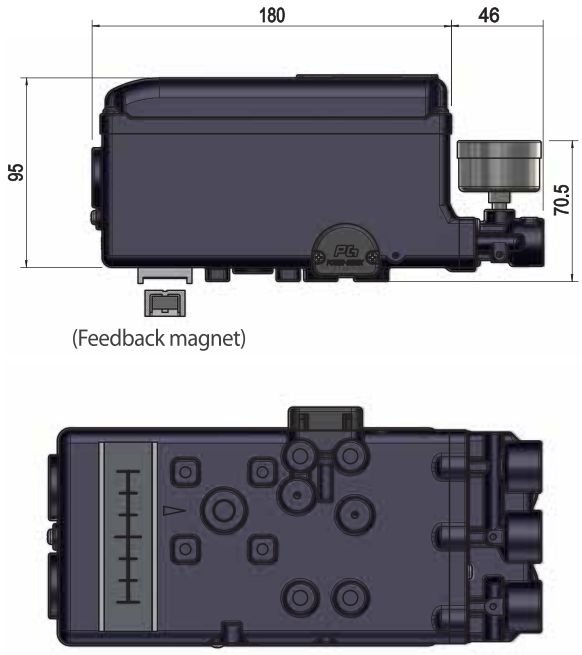

ASD-5011 Rotary type

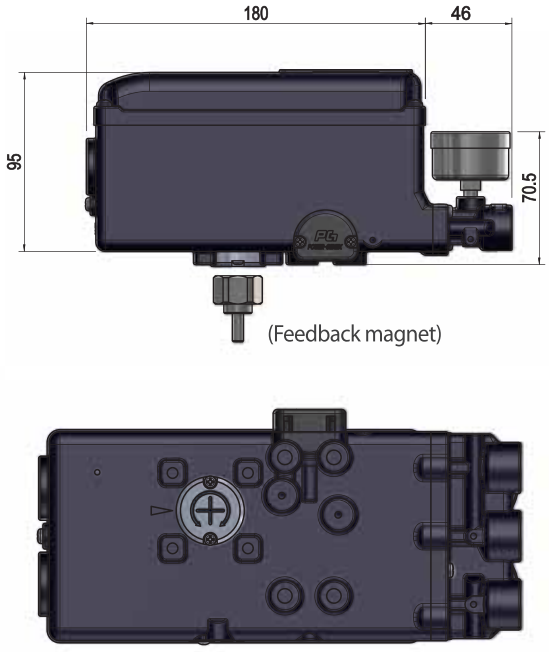

All innovation
on driving your valve automation

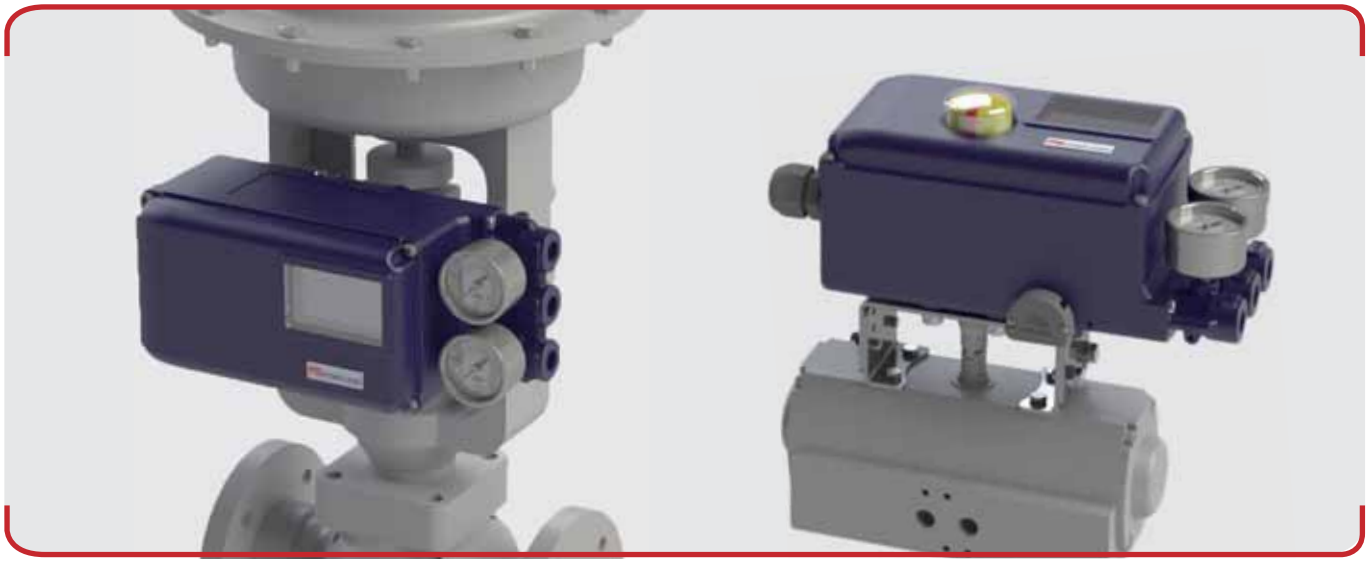

POWER-GENEX LTD.

99, Eunbong-ro, Namdong-gu, Incheon 21639 South Korea

Tel. +82-32-812-6644

Fax. +82-32-812-6645

Website. http://www.powergenex.com

E-mail. sales@powergenex.com (overseas sales)

sales2@powergenex.com (domestic sales)

CA : 20-12

POWER-GENEX®

ASD-7000 Series Smart Valve Positioner

(Diagnostics Positioner)

ASD-7000 Positioner Series

ASD-7000 is the smart valve positioner which offers incomparable and stable control processing performance and advanced self-diagnostics for control valves. ASD-7000 has an outstanding durability and it has an improved control performance thanks to non-contact sensors with accuracy. ASD-7000 has a wide and multi-lingual display that provides diverse information and a current control situation with graph.

Features

Easy to use

- Quick auto-calibration by pushing one button
- Detecting RA (reverse acting) or DA (direct acting) automatically regardless of wrong air connections
- By-pass (auto/manual screw)
- Logical trend and histogram collection
- Providing a mounting bracket to meet IEC 60534-6-1 for linear valves
- Supporting a NAMUR mounting pattern VDI/VDE3845 (IEC60534-6-2) and providing a multi-size mounting bracket for rotary valves

Improved display performance

- Wide and multi-lingual full text graphical TFT LCD with high-resolution and clear graphic images
- Provides 3 steps to re-size information on LCD
- Shows a control history trend, a logical trend and histogram collection

Various communications

- HART (Ver. 7)
- Profibus PA
- Foundation Fieldbus

Non-contact position sensor

- Magnetic position sensor (MPS, non-contact)
- Resistant to vibration
- Excellent temperature characteristics

Improved durability

- Vibration and impact tolerant
- Resistant to dirty air and humidity

Diagnostics

- Self-diagnostics
- Advanced diagnostics with 4 x pressure sensor
- Valve signature
- Valve step response
- Partial stroke test (PST)

Options

- Output position transmitter (4 - 20 mA)
- 2 x 24VDC software limit switch or 2 x SPDT mechanical limit switch
- Stainless steel body (316SS)
- HART communication
- Profibus PA communication
- Foundation Fieldbus communication

Solid body design

- Aluminum housing / Epoxy-coated
- High corrosion-resistant stainless steel 316 body
- Protection class : IP66
- Flameproof Ex db IIC, Dustproof Ex tb IIIC

Non-contact sensor providing high durability and improved control performance

- Higher durability than a feedback lever type
- Reduced hysteresis
- Provides a remarkable control performance under a harsh working environment with vibration

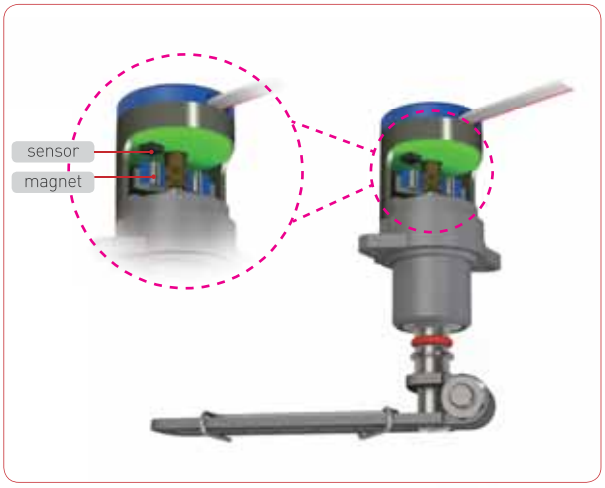

< MPS - Magnetic Position Sensor >

Easy and quick auto-calibration

Quick auto-calibration by pushing one button provides optimal positioner setting easily and fast.

Improved display

ASD positioner has a wide display with high visibility and it's possible to re-size information with 3 steps and available to show a control graph on LCD.

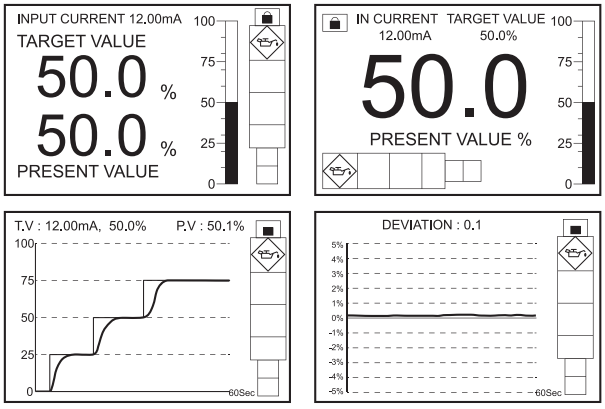

Multi-lingual display

English, Chinese and Korean are available on LCD and more languages are planned to add through a continuous update

- MODE
  - DISPLAY VARIABLE
  - MANUAL
  - MONITORING
  - AUTO TUNE
  - PARAMETERS
  - TEST

- 모 드
  - 표시 변수
  - 수동 제어
  - 모니터링
  - 오토 튠
  - 파라메터
  - 테스트

- 模 式
  - 显示设置
  - 手动模式
  - 监测模式
  - 自动模式
  - 参数
  - 测试

Self-diagnostics

Advanced self-diagnostics is performed with pressure sensors installed inside of ASD positioner and results from self-diagnostics can be shown on LCD or transmitted over communication according to NAMUR NE107 standard.

Failure | Out of Specification | Maintenance Required | Check Function

Offline diagnostics (self-diagnostics)

Failure

- Loop current failure
- Loop voltage failure
- Supply air failure
- Auto calibration failure

Out of Specification

- Position high / low limit
- Temperature high / low limit
- Supply air high / low limit

Maintenance Required

- Not calibrated
- Use small angle
- Deviation error
- TUNE-point adjust error

Check Function

- PST Failure
- Use SHAPE parameter
- Valve friction high
- Check EMI / RFI

Online FDT DTM (Device Type Manager)

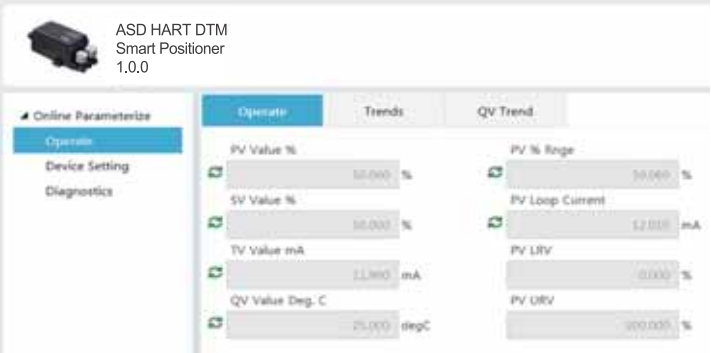

It's possible to make use of advanced diagnostics of ASD positioner by using an online DTM.

※ Available only with HART communication option

Online diagnostics (Advanced diagnostics)

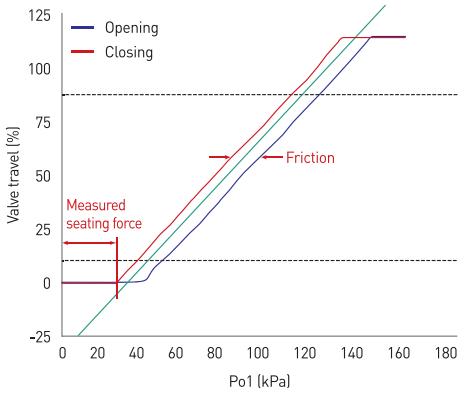

- **Valve signature**

Valve signature is the result which records air pressure change and valve position according to ramp input signals. The following values about performance of valve control are obtained from this valve signature and it's possible to confirm a current valve status (integrity)

a. Seating force
b. Friction
c. Spring range

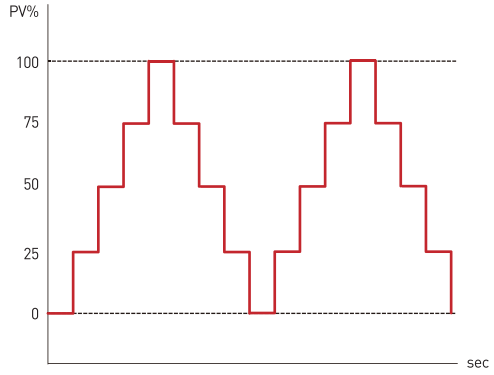

- **Valve step response**

This is the result which shows a valve control status with on-off signals or on every 25% step.

a. ON-OFF step
b. 25% step

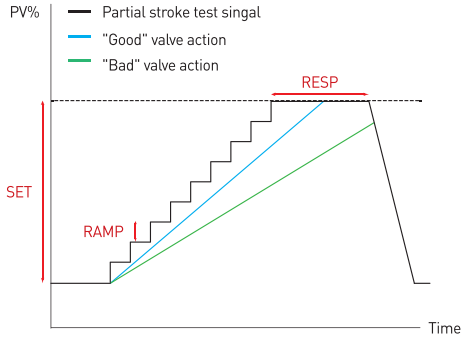

- **PST** (Partial Stroke Test)

This is the function which records changes by operating the positioner with the set values automatically without influencing system in an automatic control mode.

It's possible to confirm a valve status (integrity) by comparing the past one with the present one.

Technical specifications
ASD-7000 Smart valve positioner

Input	
Standard	
Supply power	4 to 20mA, Loop powered
Max.	50mA
Min.	3.6mA
Load voltage at 20mA	6.8V
Impedance at 20mA	340 Ω
HART Communication ver. 7	
- Without advanced diagnostics	
Load voltage at 20mA	7.8V
Impedance at 20mA	390 Ω
- With advanced diagnostics (with 4 pressure sensors)	
Load voltage at 20mA	9.5V
Impedance at 20mA	475 Ω
Profibus PA & Foundation Fieldbus	
Supply power	Bus power 9 – 32VDC
Current Consumption	Profibus - 15mA
	Foundation Fieldbus - 16mA

Output	
Range	0 – 7 bar (0 – 100 psi)
Air consumption	2.5 L.P.M
	at 1.4 bar (20 psi) supply pressure
	3.0 L.P.M
	at 6 bar (90 psi) supply pressure
Air Capacity	250 L.P.M
	at 1.4 bar (20 psi) supply pressure
	300 L.P.M
	at 6 bar (90 psi) supply pressure

Air Supply	
Instrument air	free of oil, water and dust acc. to
	DIN/ISO 8573-1 pollution and oil
	content according to Class 3
Supply pressure	1.4 to 7 bar (20 to 100 psi)

Applicable actuators	
Operating type	Linear, Rotary, Remote
Acting type	Single, Double
Action	direct action(DA), reverse action(RA)
Linkage type	
Travel range	Linear : 10 – 120 mm
	Rotary : 30˚– 150˚ rotation angle
Linkage-less type	
Travel range	Linear : 10 – 120 mm
	Rotary : 30˚– 150˚ rotation angle
	Remote : 3, 5, 10, 15, 20, 30m
※ Other travel range on request	

Characteristics	
Linearity	< ±0.5% F.S
Sensitivity	< ±0.3% F.S
Hysteresis	< ±0.3% F.S
Repeatability	< ±0.2% F.S
Performance characteristic	Linear, Shape (EQ%, Quick), User set

Enclosure	
Material	Aluminum die-cast + Epoxy-coated
	316 Stainless steel housing
Protection class	IP66
Pneumatic connections	PT 1/4
	NPT 1/4
Electrical connections	PF 1/2
	NPT 1/2
	M20 x 1.5
Weight	2.4 kg – Aluminum die-cast
	4.5 kg – Stainless steel 316

Hazardous area approvals	
IECEx	Flameproof, Ex db IIC T6/T5 Gb Dustproof Ex tb IIIC T85℃/T100℃Db
ATEX	
KCs	
CCC / EAC	

Environmental influences	
Ambient temperature	Standard : -30 to 80℃ (-22 to 176℉)
Operating temperature of LCD	-20 to 80℃ (-4 to 176℉)
Vibration	2G, 5 to 400 Hz
Humidity	The dew point should be at least 10℃ lower than the temperature of this device.

Feedback options	
Position Transmitter (Output signal)	
Output signal	4-20mA, 2-wired
Supply voltage	12-30VDC
Load Limitation	0 – 1000 Ω (Normally 650Ω at 24VDC)
Linearity	± 0.5%
Limit switches – Programmable software limit switches	
Type	2 x software limit switch
Rating	24VDC
Limit switches – Micro switches	
Type	2 x SPDT
Rating	5A @ 220VAC
Contact	Silver alloy
Ambient temperature	-30 - +85℃
Limit switches – P&F sensor (SJ2-SN)	
Type	NAMUR NC
Supply voltage	Nominal 8.2VDC (5 – 11 VDC)
Current consumption	Target not detected > 3mA
	Target detected < 1mA
Ambient temperature	-40 - +100℃

Mounting brackets	
Linear type	IEC 60534-6-1
Rotary type	IEC 60534-6-2

ASD-7000 Series How to order

							①	②	③		④	⑤	⑥	⑦	⑧	⑨	⑩	⑪		⑫	⑬
ASD-7000 Series positioner					ASD - 7		X	X	X	-	F	X	X	X	X	X	X	X	-	X	X
1. Body material	Aluminum die-cast						0														
	Stainless steel 316						1														
2. Actuator operation	Linear							0													
	Rotary							1													
3. Feedback type	Linkage type								0												
	Linkage-less type								1												
	Remote type								2												
4. Hazardous area & Protection	**Flameproof Ex db IIC T6/T5 Gb**										F										
	Dustproof Ex tb IIIC T85℃/T100℃ Db																				
5. Feedback size	Linkage type	Linear type (ASD-7x00)	Stroke 10 – 60mm									B									
			Stroke 10 - 120mm									C									
			*Others on request																		
		Rotary type (ASD-7x10)	Fork lever									F									
			NAMUR shaft									N									
	Linkage -less type	Linear type (ASD-7x01, 7x02)	Stroke 10 – 120mm									B									
			*Others on request																		
		Rotary type (ASD-7x11, 7x12)	M6 Connector									6									
			M8 Connector									8									
6. Gauge (Out1, Out2 gauge)	6 bar (90 psi)												1								
	10bar (150 psi)												2								
7. Position feedback	None													N							
	Position transmitter (4-20mA)													O							
	Advanced diagnostics + position transmitter (in pending)													A							
8. Limit switches	None														N						
	2 x 24VDC software limit switch														L						
	2 x micro switch (SPDT) **- Only for Rotary type**														S						
	2 x P&F proximity sensor **- Only for Rotary type**														P						
9. Communication	None															N					
	HART communication															H					
	Profibus PA (in pending)															P					
	Foundation Fieldbus(in pending)															F					
10. Connection threads (pneumatic – electrical)	PT(Rc) 1/4 – PF(G) 1/2																3				
	NPT 1/4 – NPT 1/2																4				
	PT(Rc) 1/4 – M20x1.5																5				
	NPT 1/4 – M20x1.5																6				
	※ Others on request																				
11. Mounting bracket	None																	N			
	Linear type / IEC 60534-6-1																	L			
	Rotary type / IEC 60534-6-2																	R			
12. Remote cable (only for ASD-7xx2)	3, 5, 10, 20, 30m																			X	
13. Temperature	Standard (-30 - +80℃)																				Blank
	Low temperature (-40 - +80℃)																				LT

Dimensions (Linkage type)

ASD-7000 Linear type

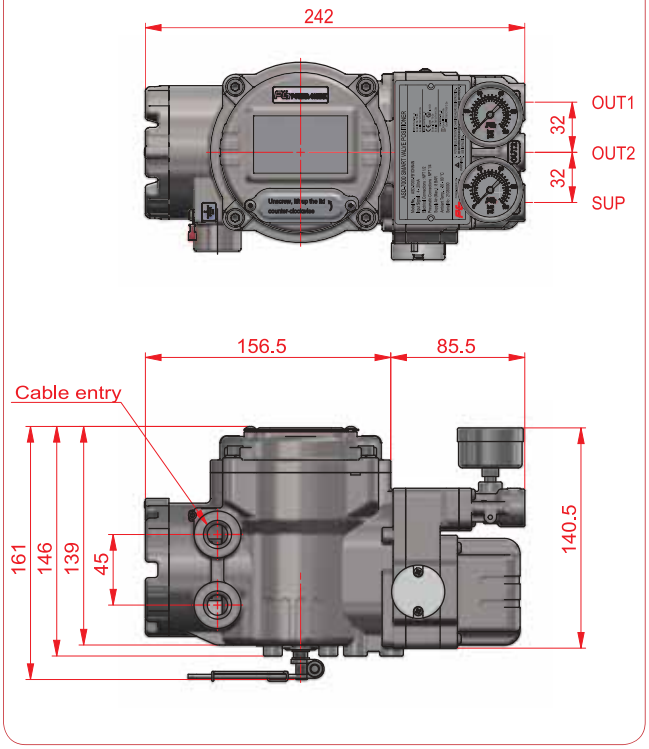

ASD-7010 Rotary type

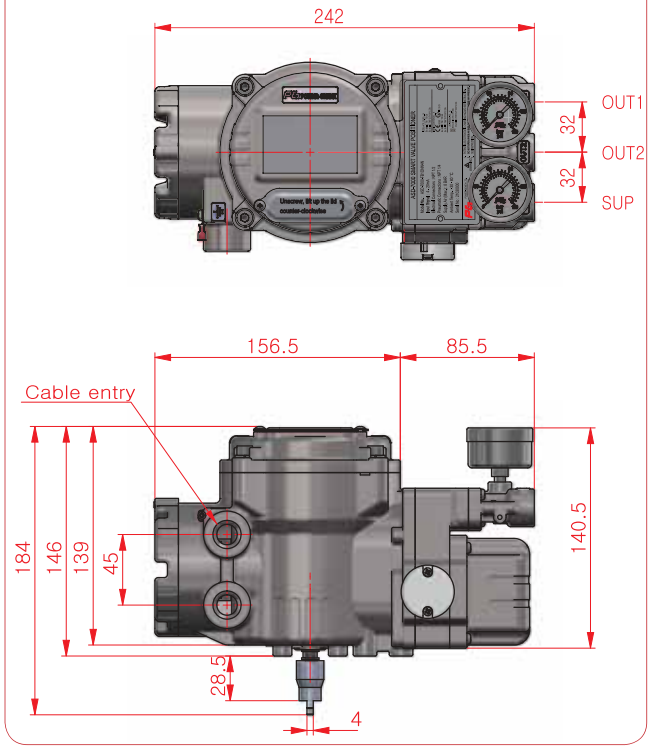

Dimensions (Linkage - less type)

ASD-7001 Linear type

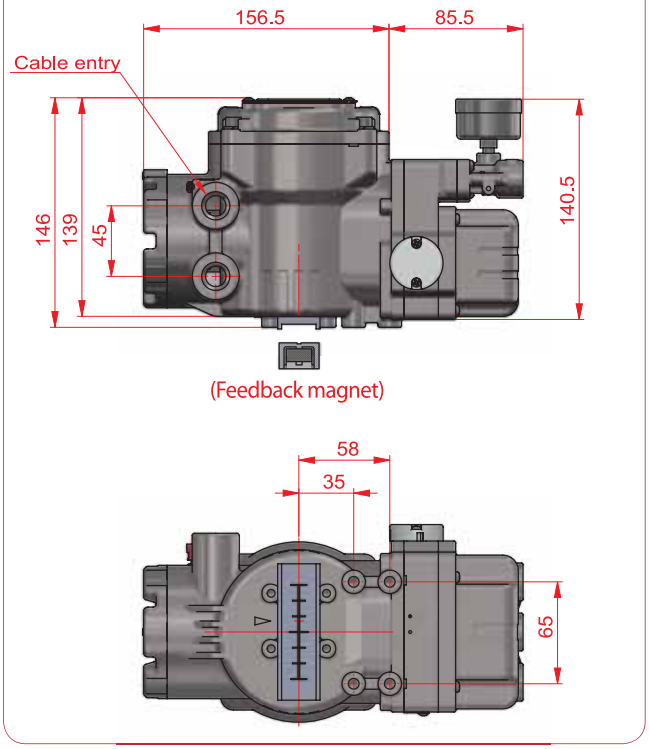

ASD-7011 Rotary type

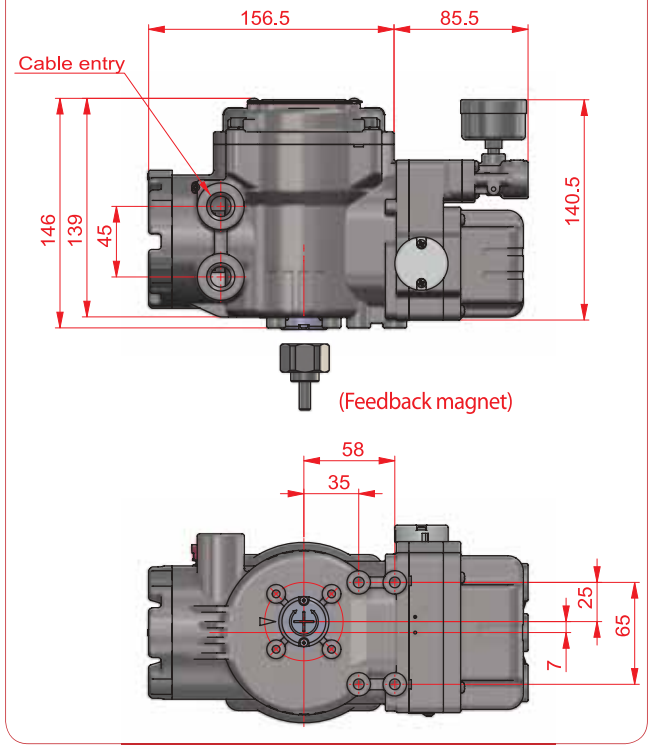

All innovation
on driving your valve automation

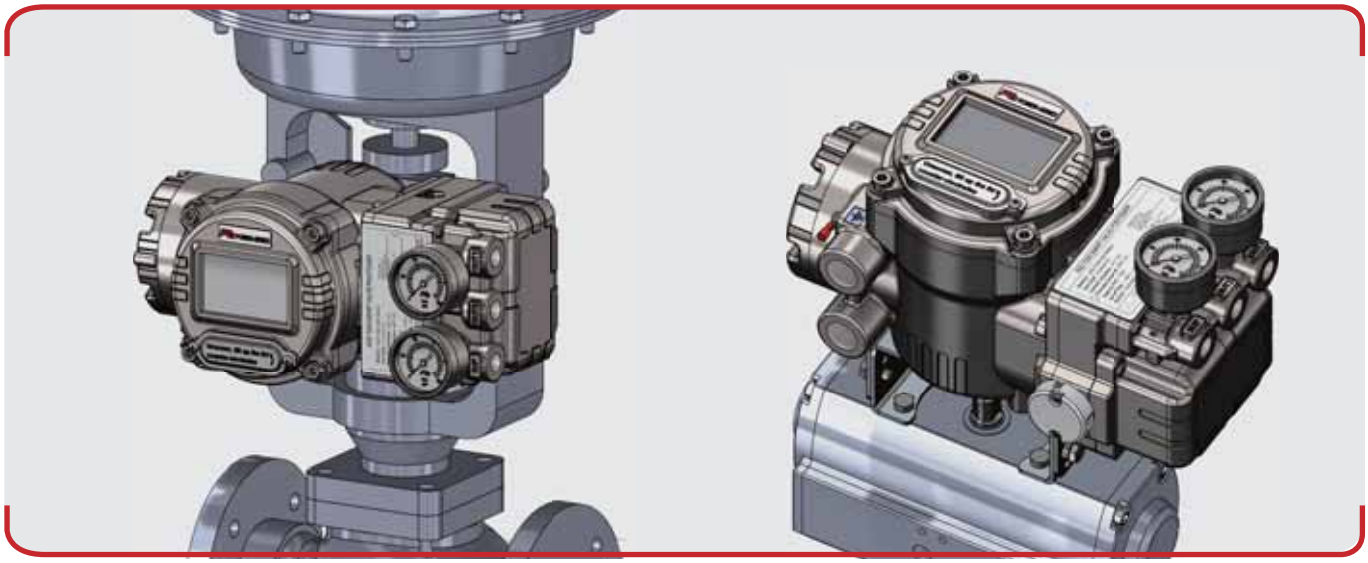

POWER-GENEX LTD.

99, Eunbong-ro, Namdong-gu, Incheon 21639 South Korea

Tel. +82-32-812-6644

Fax. +82-32-812-6645

Website. http://www.powergenex.com

E-mail. sales@powergenex.com (overseas sales)
sales2@powergenex.com (domestic sales)

CA : 21-03

SS2 Linear / Rotary

Smart performance with innovative and ever-strong coil drive even under harsh working environments

Features

- Easy and quick auto-calibration
- Detecting RA (reverse acting) or DA (direct acting) automatically regardless of wrong air connections
- Available to use for single or double acting without any special adjustments
- Compact design allowing to be installed on small actuators
- Providing error messages against performance failures
- Possible to test the actuator with any fixed signal under a test mode
- Programmable characteristic curve with 17 points
- Wide operating temperature range -30 ~ +80℃
- Improved control of high-friction globe and ball valves by eliminating an overshoot and a hunting
- Low air consumption
- Providing a mounting bracket to meet IEC 60534-6-1 for linear valves
- Supporting a NAMUR mounting pattern VDI/VDE 3845 (IEC 60534-6-2) and providing a multi-size mounting bracket for rotary valves

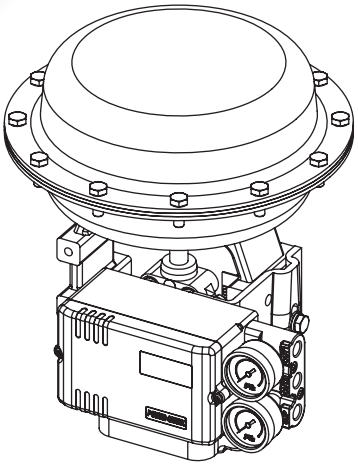

- SS2L (Linear Type)

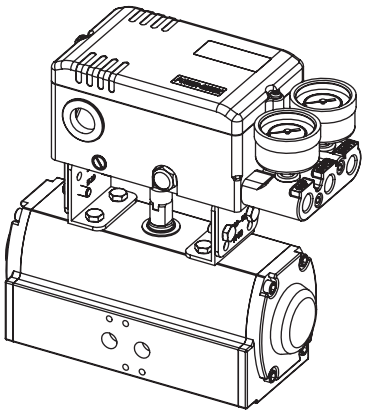

- SS2R (Rotary Type)

Options

- Output position transmitter (4 - 20 mA)
- 2 x alarm limit or micro switch (SPDT)
- Low temperature (- 40℃)
- Intrinsically safe type (IECEx / ATEX / TR-CU / KC Ex ia IIC T6/T5)
- HART communication
- Profibus PA communication
- Foundation Fieldbus communication

Specifications

Communication	Without	HART	Profibus - PA	Foundation Fieldbus
Input Signal / Bus voltage	4 - 20 mA @ 24 VDC		9 - 32 VDC	
Min. / Max. Current	3.6 mA / 50 mA		-	
Current Consumption	-		15mA	16mA
Voltage Drop (Resistance)	8.7 VDC(435Ω)	9.4 VDC(470Ω)	-	
Stroke / Angle	Linear type : 5 - 130 mm * Rotary type : 25 - 120°			
Air Supply Pressure	1.4 - 7.0 bar (20 - 100 psi), filtered, compressed dry and non-oiled to meet Class 3 of ISO 8573-1			
Output Pressure Range	0 - 100% of supply air pressure			
Air Capacity	80 ℓ/min = 4.8 N㎥/h = 2.8 scfm (Sup = 1.4 bar) 233 ℓ/min = 14 N㎥/h = 8.2 scfm (Sup = 6 bar)			
Air Consumption	2.8 ℓ/min = 0.17 N㎥/h = 0.1 scfm (Sup = 1.4 ~ 6 bar)			
Characteristic	Linearity < ±0.3% F.S Hysteresis < 0.2% F.S	Sensitivity < 0.2% F.S Repeatability < 0.2% F.S		
Performance Characteristic	Linear, EQ %, Quick open, User set (17 points)			
LCD Indication	4-digit LCD indicator			
Adjustable Speed	1 - 1000 (lowest 1, highest 1000)			
Scan Time	2ms			
Shut-off Value	Range 0 - 10% of position signal			
Valve Action	direct action (DA) / reverse action (RA)			
Operating Temperature	- 30 ~ +80℃ (- 22 ~ +176 ˚F) **			
Pneumatic Connections	PT(Rc) 1/4 or NPT 1/4			
Electrical Connections	2 x PF(G) 1/2 , NPT 1/2 , M20 x 1.5			
Protection Class	IP66, Intrinsically safe (IECEx / ATEX / KC Ex ia IIC T6/T5)			
Body Material	Aluminum die-cast / powder-painted			
Weight	1.6 kg			

* Up to 200mm on request ** -40℃ on request

Principle of Operation

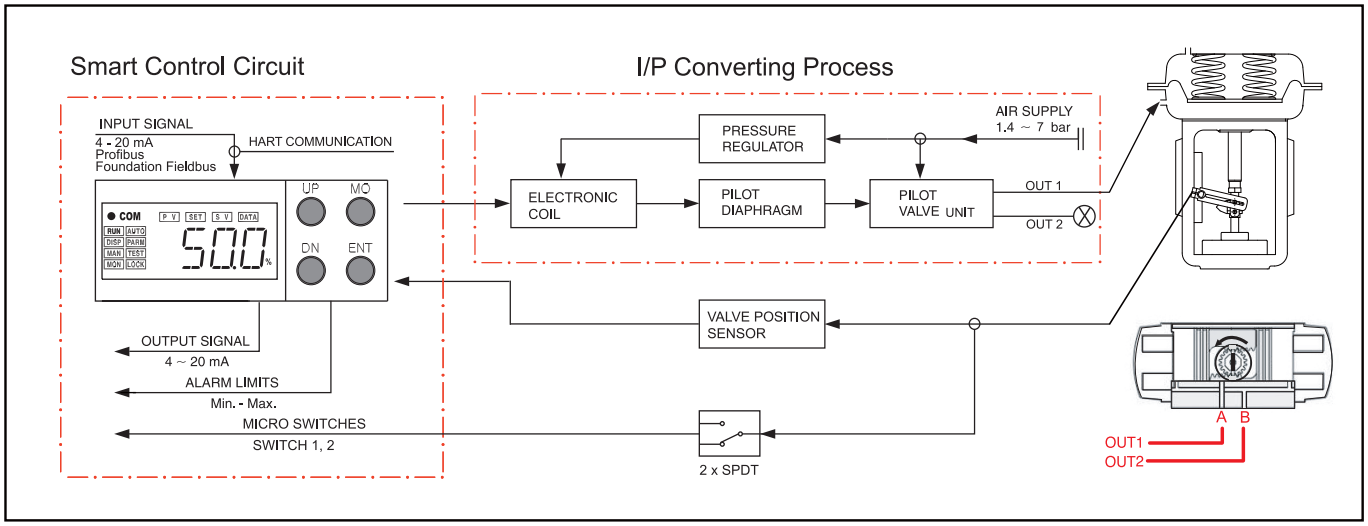

If 4-20 mA input signal(or Bus communication signal) is supplied, the micro processor compares input signal with position feedback and sends control signal to the I/P converting module. Pneumatic signal from the I/P converting module operates the valve and the valve stays at the desired position.

Mounting to Linear Actuator

- SS2L (Linear Type)

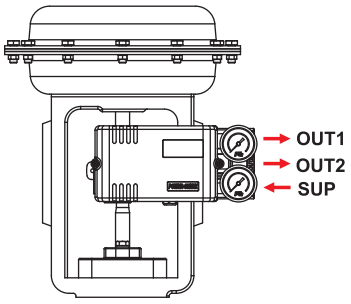

< Front View >

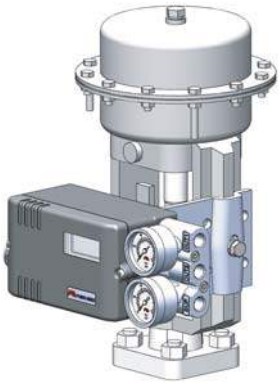

< Side View >

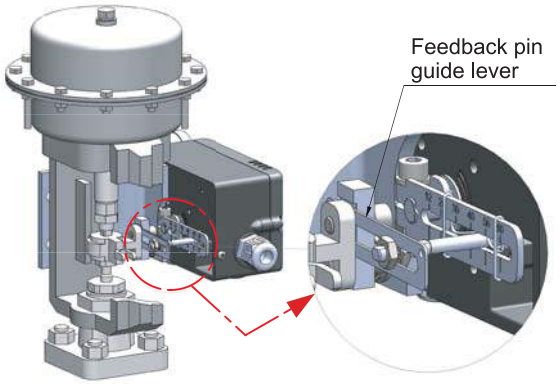

< Feedback Lever Connection >

"A" Type

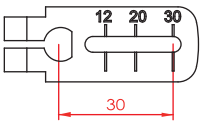

"B" Type

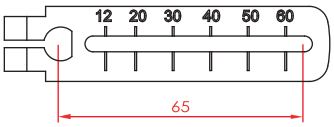

"C" Type

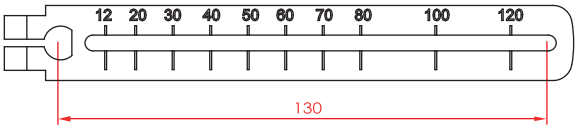

Feedback Lever

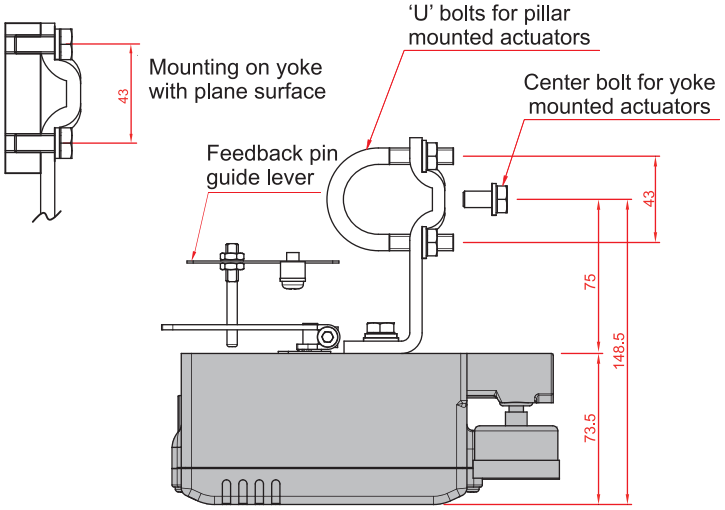

Mounting to linear actuators to IEC 60534 6-1

Mounting to Rotary Actuator

- SS2R (Rotary Type)

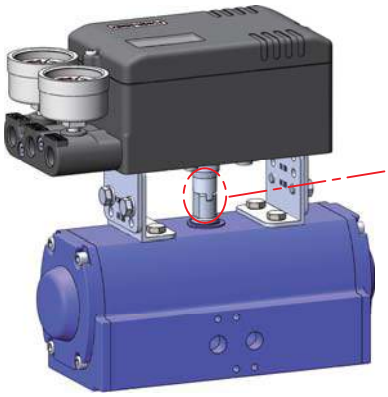

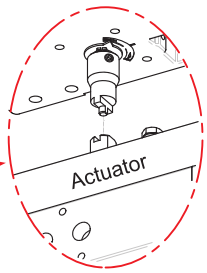

NAMUR Type Mounting (VDI/VDE 3845, IEC 60534-6-2)

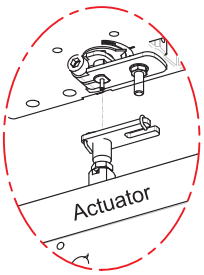

Fork Lever Type Mounting

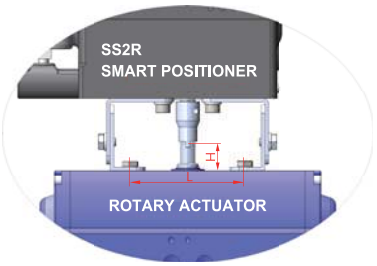

Size Variation of Multi-Size Bracket

1) 80 x 30 x 20 (H) , 4) 130 x 30 x 20 (H)
2) 80 x 30 x 30 (H) , 5) 130 x 30 x 30 (H)
3) 80 x 30 x 50 (H) , 6) 130 x 30 x 50 (H)

H : Rotary Actuator Shaft Height
L : Length (80 or 130mm)

Air Connections

- SS2L (Linear Type)

Direct Acting (DA)	
DA 1 As the input signal increases, Valve stem moves downwards Actuator : DA	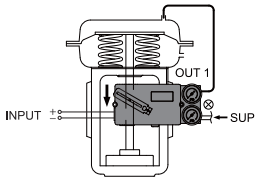 OUT2 must be plugged
DA 2 As the input signal increases, Valve stem moves downwards Actuator : DA	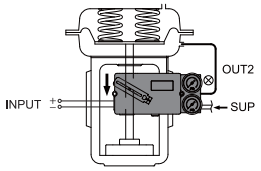 OUT1 must be plugged
DA 3 As the input signal increases, Valve stem moves downwards	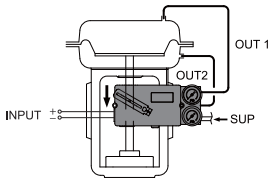

Reverse Acting (RA)	
RA 1 As the input signal increases, Valve stem moves upwards Actuator : RA	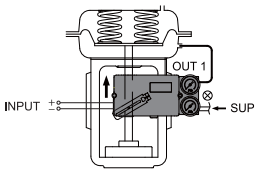 OUT2 must be plugged
RA 2 As the input signal increases, Valve stem moves upwards Actuator : RA	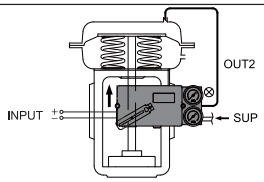 OUT1 must be plugged
RA 3 As the input signal increases, Valve stem moves upwards	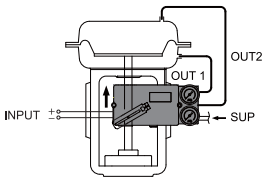

- SS2R (Rotary Type)

Spring Return	Double Acting	Double Acting
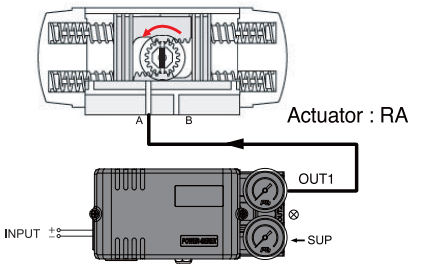 OUT2 must be plugged	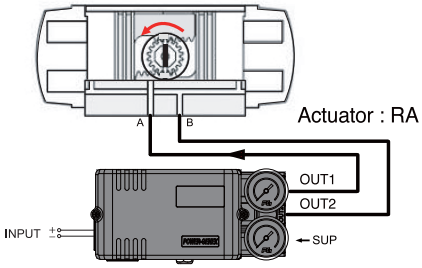	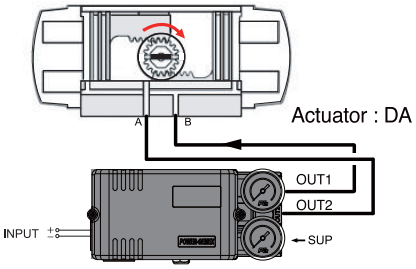
As the input signal increases, Actuator shaft rotates counter-clockwise	As the input signal increases, Actuator shaft rotates counter-clockwise	As the input signal increases, Actuator shaft rotates clockwise

	Spring Return	Double Acting
Reverse Acting	Out1 : piped, Out2 : plugged	Out1 : piped to Actuator port A, Out2 : piped to Actuator port B
Direct Acting	Out1 : plugged, Out2 : piped	Out1 : piped to Actuator port B, Out2 : piped to Actuator port A

SS2 Front Cover Removed

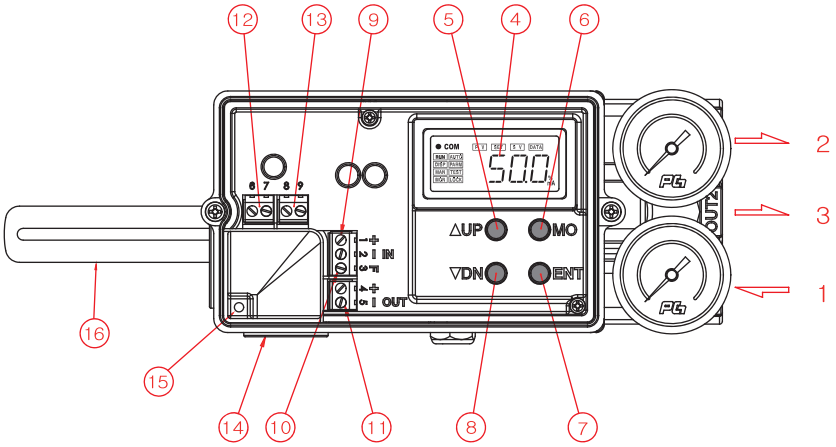

1 : Air supply
2 : OUT 1
3 : OUT 2
4 : Display LCD
5 : Up key
6 : Mode key
7 : Enter key
8 : Down key
9 : Input signal (+, -)
10 : Frame ground
11 : Output signal (+, -)
12 : Alarm limit 1
13 : Alarm limit 2
14 : Electrical connections
15 : Ground
16 : Feedback lever

Electrical Connections

1 (+) 2 (−) — IN. 4-20mA input signal

3 (FG) — Frame Ground

4 (+) 5 (−) — OUT. 4-20mA output signal

6 (+) 7 (−) — LS1. (Low) Alarm limit 1

8 (+) 9 (−) — LS2. (High) Alarm limit 2

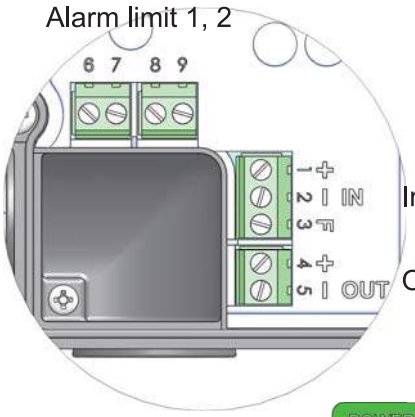

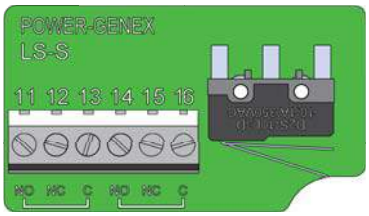

Micro switches 1, 2

Characteristic Curves

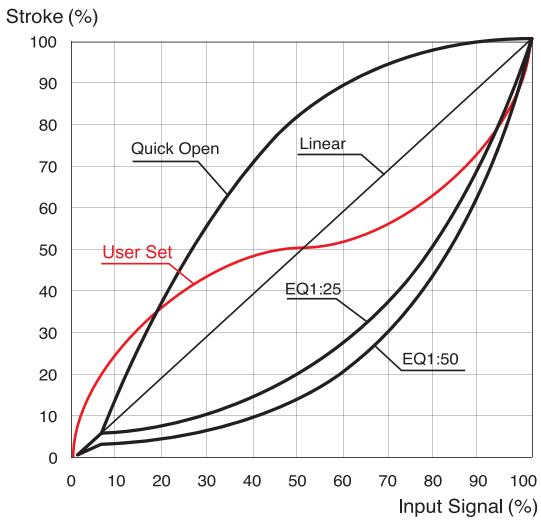

Quick Start and Checking

	Button	Action
Auto - Calibration	MO	Push 5 seconds for auto-calibration
Span	▽DN → ENT ▽DN or ΔUP ENT → MO	Push ▽DN 5 seconds to change a measured span (Try this option only when a valve doesn't reach a desired position)
Ambient Temp.	ENT	Confirm an ambient temperature surrounding this smart valve positioner

Parameters Diagram

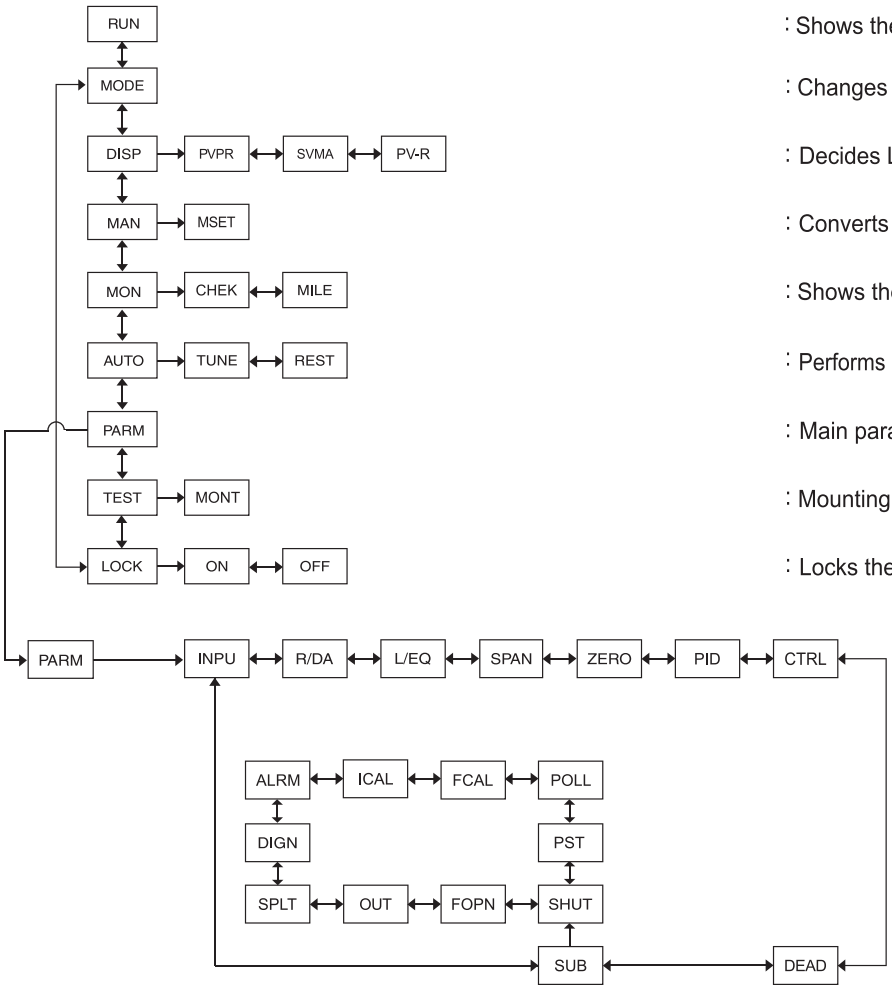

: Shows the operating situation of the positioner

: Changes the parameters

: Decides LCD display mode in mA, % or a reverse way

: Converts to the manual mode

: Shows the selected parameters and a total valve runtime

: Performs auto-calibration and resets all programmed values

: Main parameters

: Mounting test mode

: Locks the set values

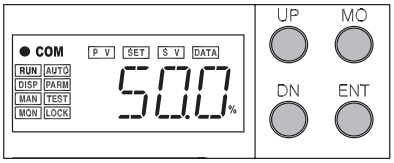

LCD Display

● COM : Hart Communication

Parameter	Description	Fcution	Default
INPU	Input signal	4 ~ 20mA or 20 ~ 4mA	4 ~ 20mA
R/DA	RA/DA	Reverse acting or direct acting	Auto-set
L/EQ	Characteristic	Linear, E.Q.%(1:25 or 1:50), Quick open or User set(17points)	Linear
SPAN	Span adjustment	0 ~ 100%	100%
ZERO	Zero adjustment	0 ~ 99%	0%
PID	P-GN / I-GN / D-GN	Proportional / Integral / Differential gain value	Auto-set
SPED	Response speed	1 ~ 1000	1000
SWST	Slow start	Smooth operation (ON or OFF)	Auto-set
CNLT	Control limit	50 ~ 1250	Auto-set
GCNL	Gap control limit	50 ~ 1250	Auto-set
DEAD	Dead band	0 ~ 9.99%	0.5%
HDGP	D-gain setting for hard mode	D-Gain setting for hard mode	Auto-set
SHUT	Shut-off	0 ~ 9.9%	0.3%
FOPN	Full-open	0 ~ 9.9%	0.3%
OUT	Output signal	4 ~ 20mA or 20 ~ 4mA	4 ~ 20mA
SPLT	Split range	4 ~ 12mA or 12 ~ 20mA	4 ~ 20mA
DIGN	Display place	Movement to one or two decimal places	1
ALAM	Alarm limit low, high	AL1L / AL1H / AL2L / AL2H	0 ~ 10%, 90 ~ 105%
ICAL	IN4M / IN20	Internal match with 4~20mA input signals from a calibrator	Factory setting
FCAL	FB4M / FB20	Internal match with 4~20mA output signals to a calibrator	Factory setting
POLL	Polling address	HART Communication polling address (0 ~ 15)	0
PST	Partial stroke test	Checks a valve status	OFF

Wiring Alarm Limits

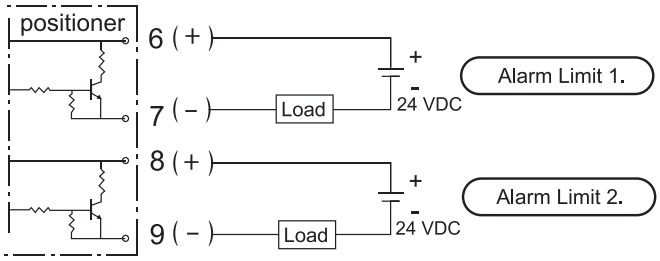

Note that 24 VDC should be supplied for power.

Micro Switches (SPDT)

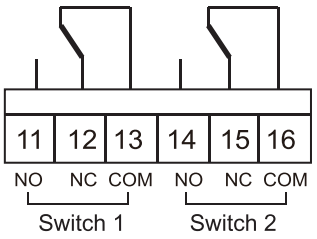

Measuring Output Signal

① With mA loop calibrator

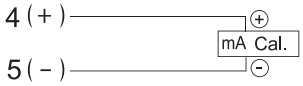

② With mulitimeter (mA)

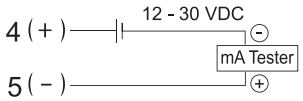

ZERO and SPAN of position feedback are automatically set after auto-calibration process.

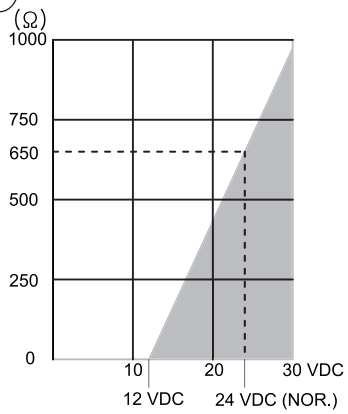

< Transmitter Load Limitation >

Micro Switches	
Type	SPDT
Rating	10.1A @ 250 VAC
Ambient Temperature	-30 ~ +85℃
Position Transmitter	
Output Signal	4 - 20 mA, 2-wire
Power Supply	12 - 30 VDC
Output Current Limit	30 mA DC
Linearity	1% F.S
Operating Temperature	-40 ~ +80℃

How to Order

SS2 | Actuator Operation | Protection Class | Feedback Lever | Pressure Gauges | By-pass | Position Feedback | Communi cation | Connection Threads | Mounting Bracket | Feedback Pin Guide Lever Set

Description	Code
Actuator Operation :	L : Linear type R : Rotary type
Protection Class :	I : Intrinsically safe IECEx / ATEX / TR-CU Ex ia IIC T6/T5 K : Intrinsically safe KC - Ex ia IIC T6/T5 W : Weatherproof to IP66
Feedback Lever : - Linear type :	A : Stroke (5~30mm) B : Stroke (5~65mm) C : Stroke (5~130mm) D : Stroke (80~200mm)
- Rotary type :	F : Fork lever N : NAMUR shaft (direct mounting)
Gauge Block :	0 : Not mounted 1 : 6 bar (90 psi) 2 : 10 bar (150 psi)
By-pass :	N : None (standard) Y : Yes (auto/manual screw)

Description	Code
Position Feedback :	N : None O : Position transmitter (4~20mA output signal) L : 2 x alarm limit S : 2 x micro switch (SPDT) M : O + L Q : O + S
Communication :	N : None H : HART P : Profibus PA F : Foundation Fieldbus
Connection Threads : (pneumatic - electrical)	3 : PT(Rc) 1/4 - PF(G) 1/2 4 : NPT 1/4 - NPT 1/2 5 : PT(Rc) 1/4 - M20 x 1.5
Mounting Bracket :	N : None L : IEC 60534-6-1 (for SS2L) R : IEC 60534-6-2 (for SS2R) VDI/VDE 3845
Feedback Pin Guide Lever Set : (only for linear type SS2L)	0 : Not included 1 : Included

Dimensions

- SS2L (Linear Type)

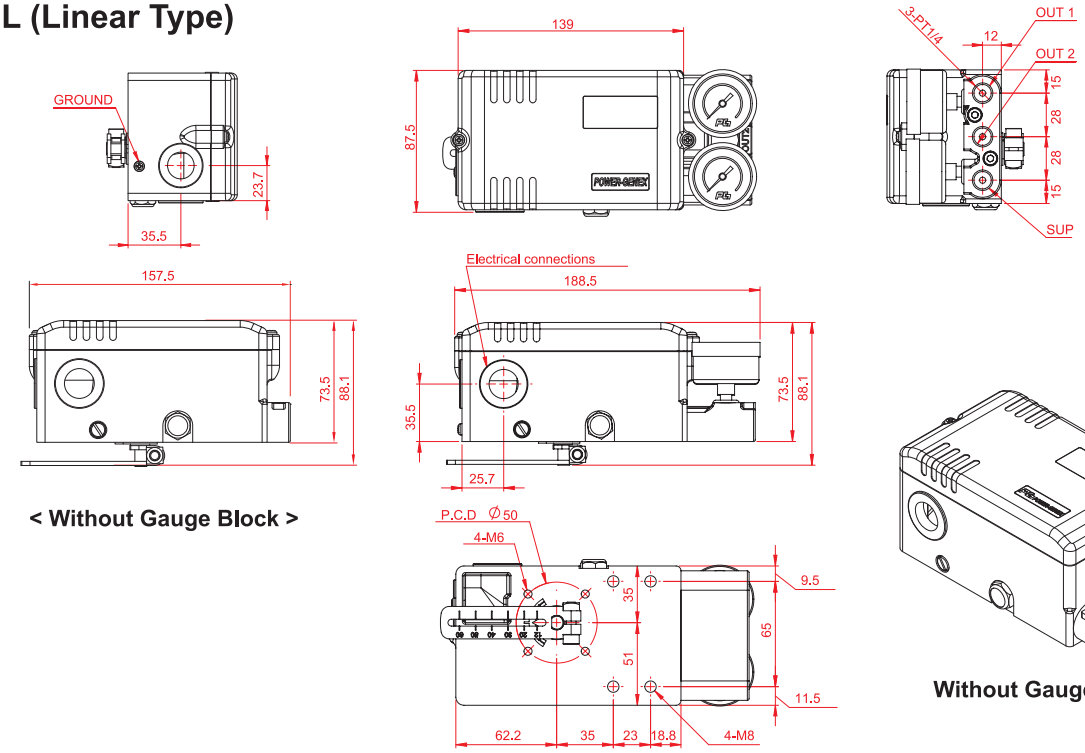

< Without Gauge Block >

Without Gauge Block

- SS2R (Rotary Type)

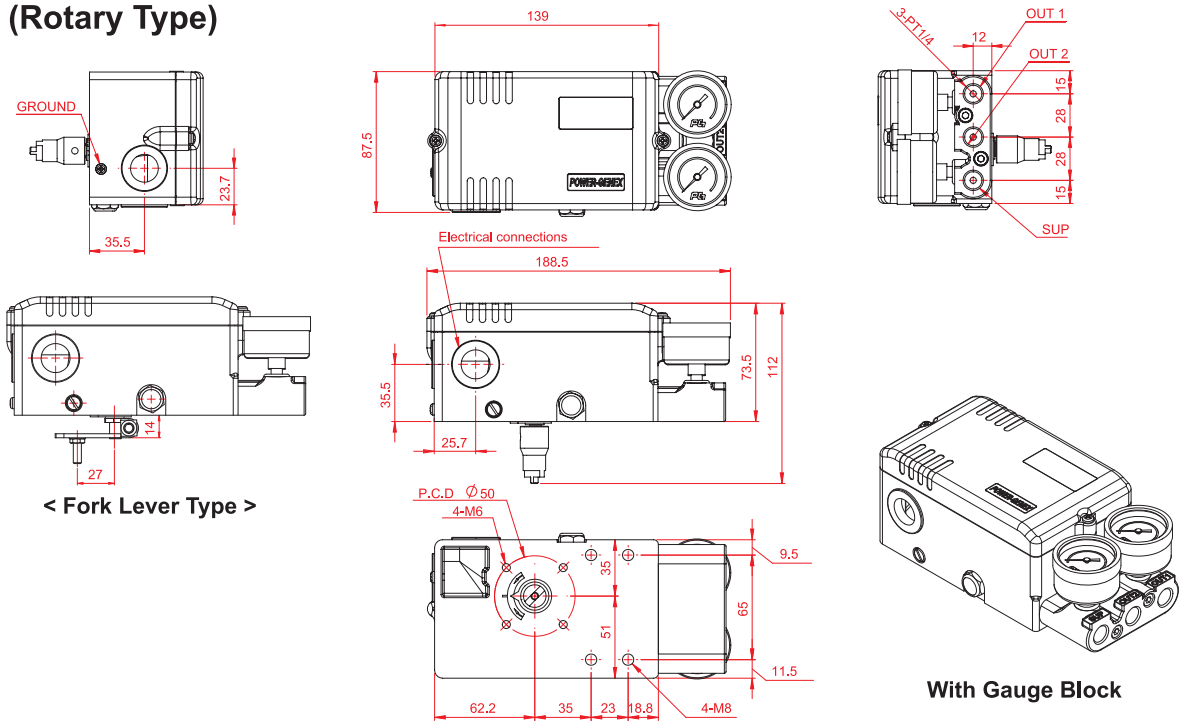

< Fork Lever Type >

With Gauge Block

- SS2 with 2 x SPDT Micro S/W

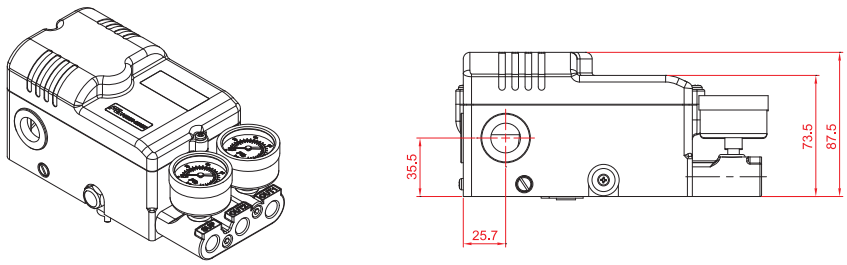

How to Order

SS2	Actuator Operation	—	Protection Class	Feedback Lever	Pressure Gauges	By-pass	Position Feedback	Communi -cation	Connection Threads	Mounting Bracket	Feedback Pin Guide Lever Set	—	Cable Length

Description	Code
Cable Length :	3 : 3 m 5 : 5 m 10 : 10 m 15 : 15 m * Other on request

* Please see "How to Order" on page 13 to select more options.

Dimensions

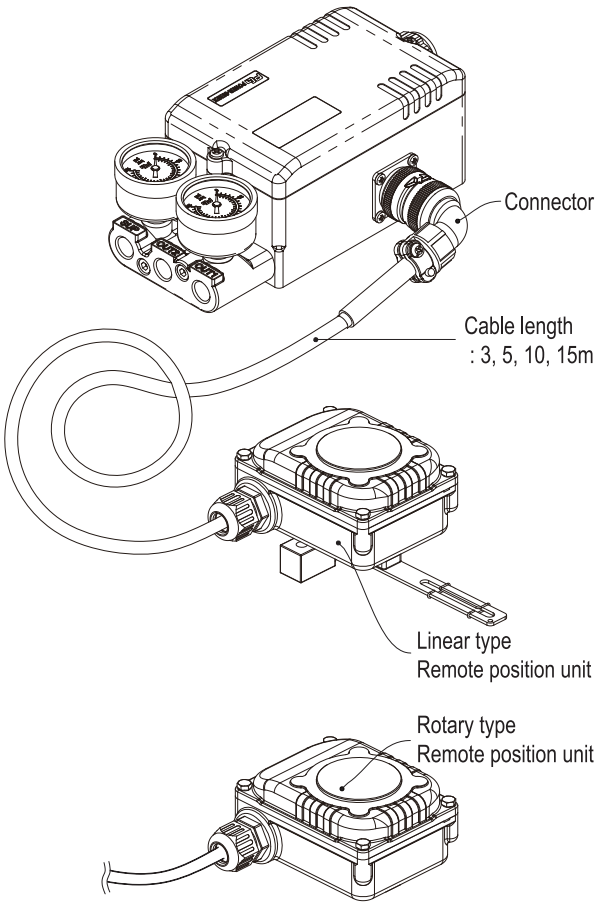

< Linear Type Remote Position Unit >

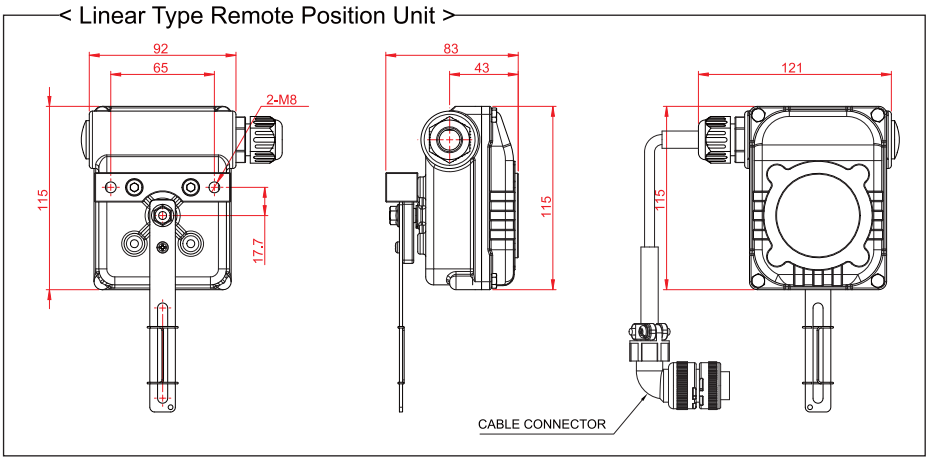

< Rotary Type Remote Position Unit >

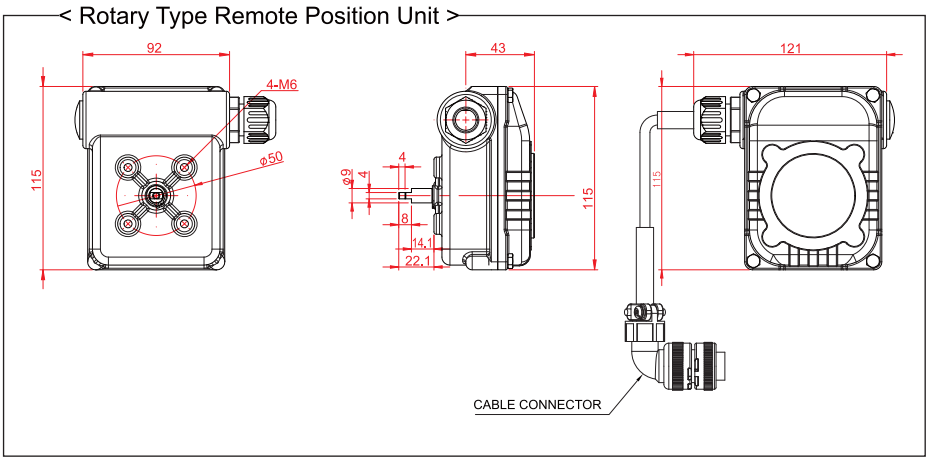

SS2S Linear / Rotary

Smart Valve Positioner
(stainless steel 316 body)

< SS2SL & SS2SR >

Specifications

Communication	Without	HART	Profibus-PA	Fieldbus
Input Signal	4 - 20 mA @ 24 VDC		9 - 32 VDC	
Min. / Max. Current	3.6 mA / 50 mA		-	
Current Consumption	-		15mA	16mA
Voltage Drop (Resistance)	8.7 VDC(435Ω)	9.4 VDC(470Ω)		
Stroke / Angle	Linear type : 5 - 130 mm * Rotary type : 25 - 120°			
Air Supply Pressure	1.4 - 7.0 bar (20 - 100 psi)			
Output Pressure Range	0 - 100% of supply air pressure			
Air Capacity	80 ℓ/min = 4.8 N㎥/h = 2.8 scfm (Sup = 1.4 bar) 233 ℓ/min = 14 N㎥/h = 8.2 scfm (Sup = 6 bar)			
Air Consumption	2.8 ℓ/min = 0.17 N㎥/h = 0.1 scfm (Sup = 1.4 ~ 6 bar)			
Characteristic	Linearity < ±0.3% F.S Hysteresis < 0.2% F.S	Sensitivity < 0.2% F.S Repeatability < 0.2% F.S		
Performance Characteristic	Linear, EQ %, Quick open, User set (17 points)			
LCD Indication	4-digit LCD indicator			
Adjustable Speed	1 - 1000 (lowest 1, highest 1000)			
Scan Time	2ms			
Shut-off Value	Range 0 - 10% of position signal			
Valve Action	Direct action(DA) / Reverse action(RA)			
Operating Temperature	- 30 ~ +80℃ (- 22 ~ +176 ℉) **			
Pneumatic Connections	NPT 1/4 (other on request)			
Electrical Connections	NPT 1/2 (other on request)			
Protection Class	IP66, Intrinsically safe (IECEx / ATEX / KC Exia IIC T6/T5)			
Body Material	Stainless steel 316			
Weight	3.8 kg (without bracket)			

* Up to 200mm on request ** -40℃ on request

How to Order

SS2S	Actuator Operation	Protection Class	Feedback Lever	Pressure Gauges	By-pass	Position Feedback	Communi cation	Connection Threads	Mounting Bracket	Feedback Pin Guide Lever Set

Description	Code
Actuator Operation :	L : Linear type R : Rotary type
Protection Class :	I : Intrinsically safe IECEx / ATEX / TR-CU Ex ia IIC T6/T5 K : Intrinsically safe KC - Ex ia IIC T6/T5 W : Weatherproof to IP66
Feedback Lever : - Linear type :	A : Stroke (5~30mm) B : Stroke (5~65mm) C : Stroke (5~130mm) D : Stroke (80~200mm)
- Rotary type :	F : Fork lever N : NAMUR shaft (direct mounting)
Gauge Block :	0 : Not mounted 1 : 6 bar (90 psi) 2 : 10 bar (150 psi)
By-pass :	N : None Y : Yes (auto/manual screw)

Description	Code
Position Feedback :	N : None O : Position transmitter (4~20mA output signal) L : 2 x alarm limit S : 2 x micro switch (SPDT) M : O + L Q : O + S
Communication :	N : None H : HART P : Profibus PA F : Fieldbus Foundation
Connection Threads : (pneumatic - electrical)	4 : NPT 1/4 - NPT 1/2
Mounting Bracket :	N : None L : IEC 60534-6-1 (for SS2SL) R : IEC 60534-6-2 (for SS2SR) VDI/VDE 3845
Feedback Pin Guide Lever Set : (only for linear type SS2SL)	0 : Not included 1 : Included

Smart Valve Positioner
(Linear Senor Positioner for Cylinder)

SS2 Linear / Rotary

< Cylinder type >

< Angle Seat Valve type >

Specifications

Communication	Without	HART	Profibus-PA	Fieldbus
Input Signal	4 - 20 mA @ 24 VDC		9 - 32 VDC	
Min. / Max. Current	3.6 mA / 50 mA		-	
Current Consumption	-		15mA	16mA
Voltage Drop (Resistance)	8.9 VDC(445Ω)	9.4 VDC(470Ω)		
Stroke	Up to 1000 mm			
Air Supply Pressure	1.4 - 7.0 bar (20 - 100 psi)			
Output Pressure Range	0 - 100% of supply air pressure			
Air Capacity	80 ℓ/min = 4.8 N㎥/h = 2.8 scfm (Sup = 1.4 bar) 233 ℓ/min = 14 N㎥/h = 8.2 scfm (Sup = 6 bar)			
Air Consumption	2 ℓ/min = 0.12 N㎥/h = 0.07 scfm (Sup = 1.4 ~ 6 bar)			
Characteristic	Linearity < ±0.3% F.S Hysteresis < 0.2% F.S		Sensitivity < 0.2% F.S Repeatability < 0.2% F.S	
Performance Characteristic	Linear, EQ %, Quick open, User set (17 points)			
LCD Indication	4-digit LCD indicator			
Adjustable Speed	1 - 1000 (lowest 1, highest 1000)			
Scan Time	2ms			
Shut-off Value	Range 0 - 10% of position signal			
Valve Action	Direct action(DA) / Reverse action(RA)			
Operating Temperature	- 30 ~ +80℃ (- 22 ~ +176 ℉) *			
Pneumatic Connections	PT(Rc) 1/4, NPT 1/4			
Electrical Connections	2 x PF(G) 1/2, NPT 1/2, M20 x 1.5			
Protection Class	IP66, Intrinsically safe (IECEx / ATEX / KC Ex ia IIC T6/T5)			
Body Material	Aluminum die-cast / power-painted			
Weight	1.6 kg (without bracket & sensor)			

* - 40℃ on request

How to Order

SS2C – Protection Class | Cylinder Stroke | Pressure Gauges | By-pass | Position Feedback | Communi cation | Connection Threads – Mounting Bracket – Cable Length

Description	Code
Protection Class :	I : Intrinsically safe IECEx / ATEX / TR-CU Ex ia IIC T6/T5 K : Intrinsically safe KC - Ex ia IIC T6/T5 W : Weatherproof to IP66
Cylinder Stroke :	A : Cylinder stroke 10 ~ 30mm B : Cylinder stroke 30 ~ 80mm C : Cylinder stroke 80 ~ 125mm D : Cylinder stroke 125 ~ 165mm E : Cylinder stroke 165 ~ 260mm F : Cylinder stroke 260 ~ 350mm x : Other on request
Gauge Block :	0 : Not mounted 1 : 6 bar (90 psi) 2 : 10 bar (150 psi)
By-pass :	N : None Y : Yes (auto/manual screw)

Description	Code
Position Feedback :	N : None O : Position transmitter (4~20mA output signal) L : 2 x alarm limit M : O + L
Communication :	N : None H : HART P : Profibus PA F : Foundation Fieldbus
Connection Threads : (pneumatic - electrical)	3 : PT(Rc) 1/4 - PF 1/2 4 : NPT 1/4 - NPT 1/2 5 : PT(Rc) 1/4 - M20 x 1.5
Mounting Bracket :	N : None Actuator Model NO.
Cable Length :	Standard, 3, 5, 10, 15m Other : On request

Dimensions

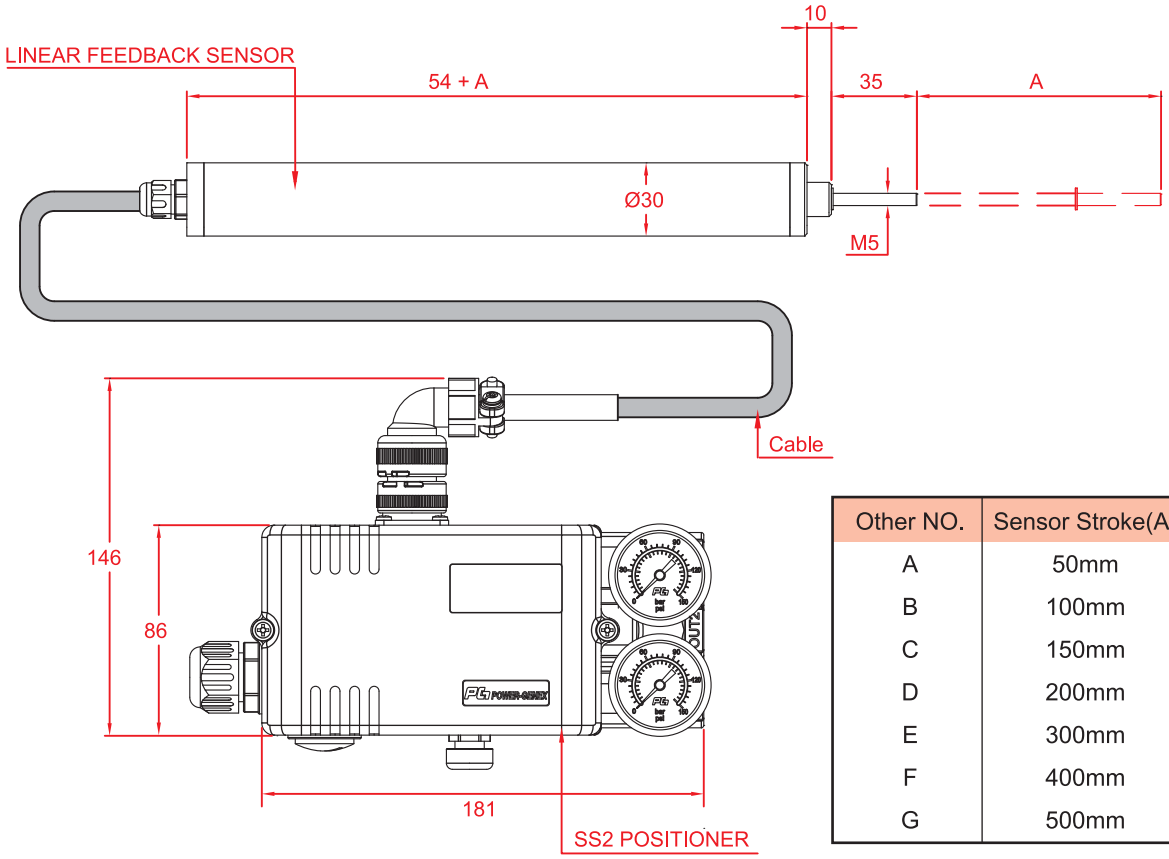

Other NO.	Sensor Stroke(A)	Stroke
A	50mm	10 ~ 30mm
B	100mm	30 ~ 80mm
C	150mm	80 ~ 125mm
D	200mm	125 ~ 165mm
E	300mm	165 ~ 260mm
F	400mm	260 ~ 350mm
G	500mm	350 ~ 440mm

Applications

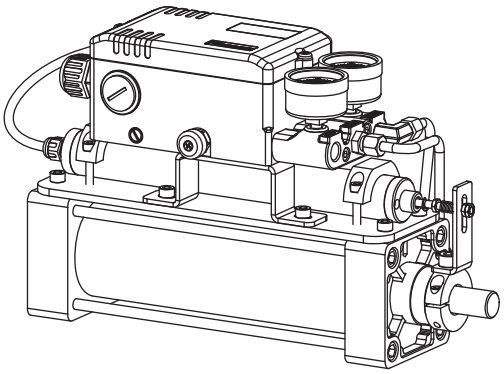

< Cylinder Mounting >

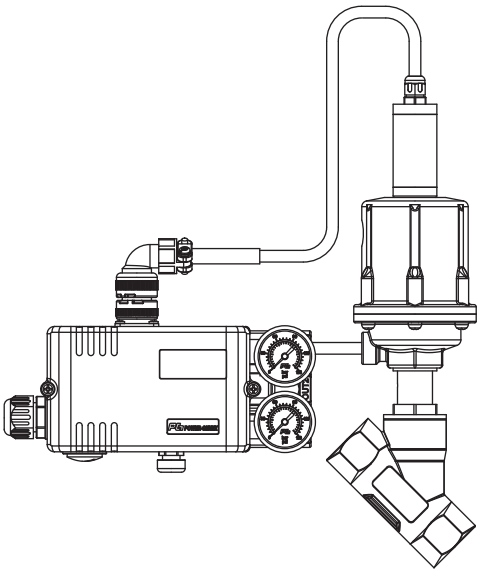

< Remote Mounting >

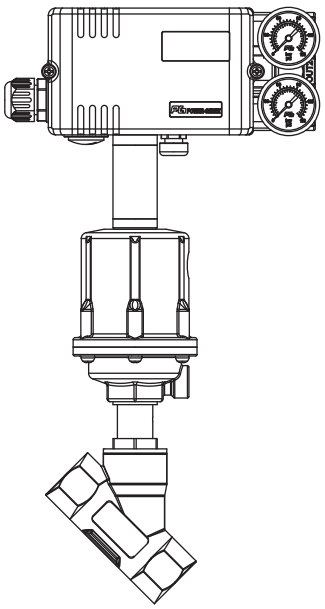

< Angle Seat Valve Mounting >

SS3 Linear / Rotary

Sturdy explosion proof housing and smart performance with innovative and ever-strong coil drive even under harsh working environments

Features

- Flameproof IECEx / ATEX / TR-CU / KC Ex d IIC T6
- Easy and quick auto-calibration
- Detecting RA (reverse acting) or DA (direct acting) automatically regardless of wrong air connections
- Available to use for single or double acting without any special adjustments
- Compact design allowing to be installed on small actuators
- Providing error messages against performance failures
- Possible to test the actuator with any fixed signal under a test mode
- Programmable characteristic curve with 17 points
- Wide operating temperature range -30 ~ +75℃
- Improved control of high-friction globe and ball valves by eliminating an overshoot and a hunting
- Low air consumption
- Providing a mounting bracket to meet IEC 60534-6-1 for linear valves
- Supporting a NAMUR mounting pattern IEC 60534-6-2 (VDI/VDE 3845) and providing a multi-size mounting bracket for rotary valves

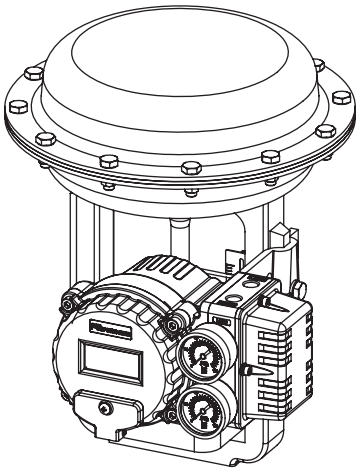

- SS3L (Linear Type)

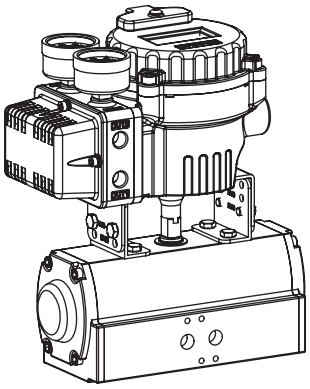

- SS3R (Rotary Type)

Options

- Output position transmitter (4 - 20 mA)
- 2 x alarm limit
- Low temperautre (-40℃)
- HART communication
- Profibus PA communication
- Foundation Fieldbus communication

Specifications

Communication	Without	HART	Profibus - PA	Foundation Fieldbus
Input Signal / Bus voltage	4 - 20 mA @ 24 VDC		9 - 32 VDC	
Min. / Max. Current	3.6 mA / 50 mA		-	
Current Consumption	-		15mA	16mA
Voltage Drop (Resistance)	8.7 VDC(435Ω)	9.4 VDC(470Ω)	-	
Stroke / Angle	Linear type : 5 - 130 mm * Rotary type : 25 - 120°			
Air Supply Pressure	1.4 - 7.0 bar (20 - 100 psi), filtered, compressed dry and non-oiled to meet Class 3 of ISO 8573-1			
Output Pressure Range	0 - 100% of supply air pressure			
Air Capacity	80 ℓ/min = 4.8 N㎥/h = 2.8 scfm (Sup = 1.4 bar) 233 ℓ/min = 14 N㎥/h = 8.2 scfm (Sup = 6 bar)			
Air Consumption	2.8 ℓ/min = 0.17 N㎥/h = 0.1 scfm (Sup = 1.4 ~ 6 bar)			
Characteristic	Linearity < ±0.3% F.S Hysteresis < 0.2% F.S	Sensitivity < 0.2% F.S Repeatability < 0.2% F.S		
Performance Characteristic	Linear, EQ %, Quick open, User set (17 points)			
LCD Indication	4-digit LCD indicator			
Adjustable Speed	1 - 1000 (lowest 1, highest 1000)			
Scan Time	2ms			
Shut-off Value	Range 0 - 10% of position signal			
Valve Action	direct action (DA) / reverse action (RA)			
Operating Temperature	- 30 ~ +75℃ (- 22 ~ +167 ℉) **			
Pneumatic Connections	PT(Rc) 1/4 or NPT 1/4			
Electrical Connections	2 x PF(G) 1/2 , NPT 1/2 , M20 x 1.5			
Protection Class	Flameproof IECEx / ATEX / KC Ex d IIC T6, IP66			
Body Material	Aluminum die-cast / powder-painted			
Weight	2.8 kg			

* Up to 200mm on request ** -40℃ on request

Principle of Operation

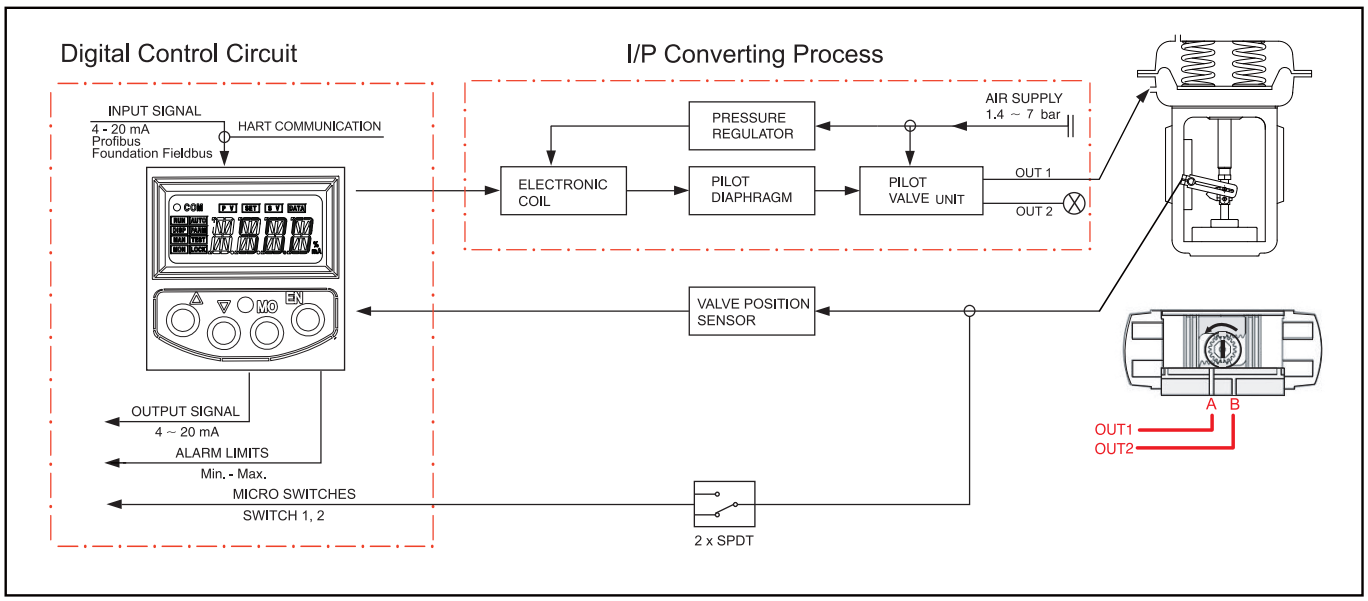

If 4-20 mA input signal(or Bus communication signal) is supplied, the micro processor compares input signal with position feedback and sends control signal to the I/P converting module. Pneumatic signal from the I/P converting module operates the valve and the valve stays at the desired position.

Mounting to Linear Actuator

- SS3L (Linear Type)

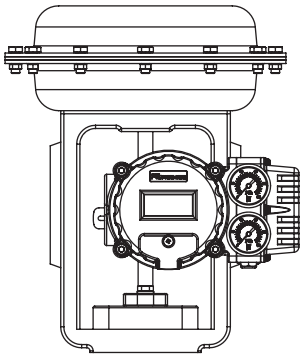

< Front View >

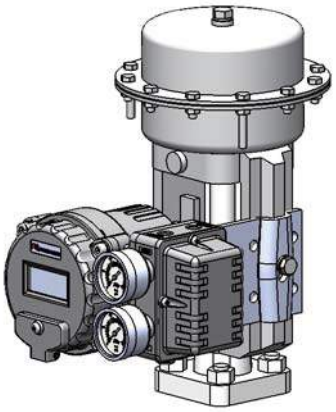

< Side View >

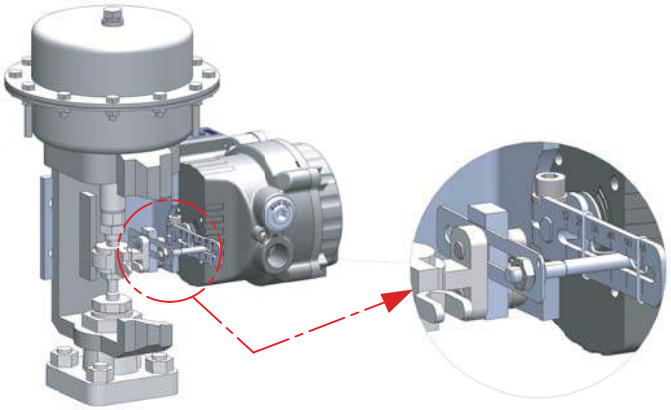

< Feedback Lever Connection >

"A" Type

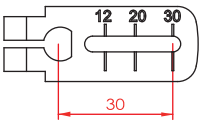

"B" Type

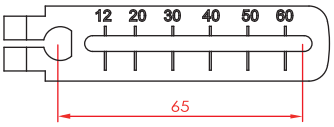

"C" Type

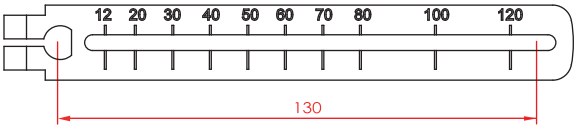

Feedback Lever

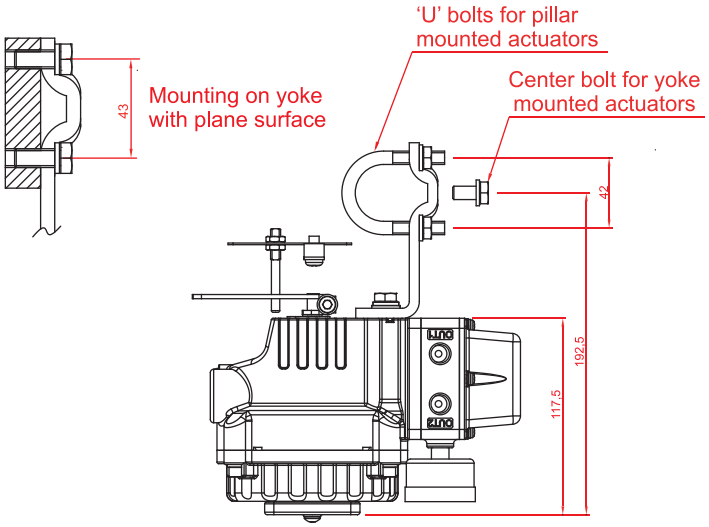

Mounting to linear actuators to IEC 60534 6-1

Mounting to Rotary Actuator

- SS3R (Rotary Type)

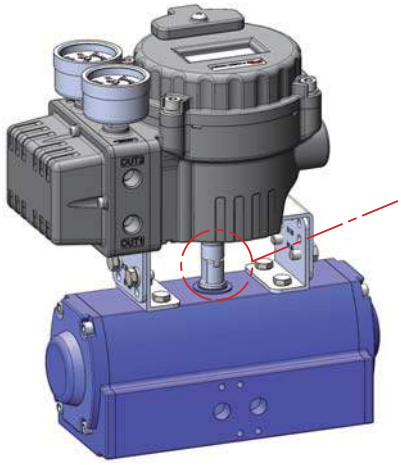

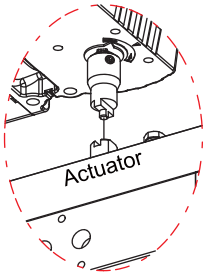

NAMUR Type Mounting (VDI/VDE 3845, IEC 60534-6-2)

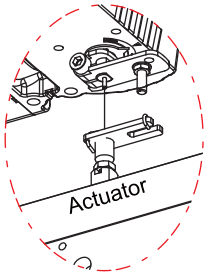

Fork Lever Type Mounting

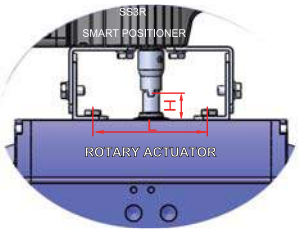

Size Variation of Multi-Size Bracket

1) 80 x 30 x 20 (H) , 4) 130 x 30 x 20 (H)
2) 80 x 30 x 30 (H) , 5) 130 x 30 x 30 (H)
3) 80 x 30 x 50 (H) , 6) 130 x 30 x 50 (H)

H : Rotary Actuator Shaft Height
L : Length (80 or 130mm)

Air Connections

- SS3L (Linear Type)

Direct Acting (DA)	
DA 1 As the input signal increases, Valve stem moves downwards Actuator : DA	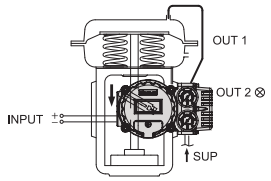 OUT2 must be plugged
DA 2 As the input signal increases, Valve stem moves downwards Actuator : DA	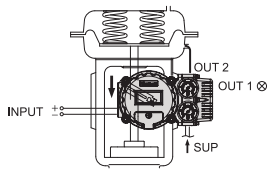 OUT1 must be plugged
DA 3 As the input signal increases, Valve stem moves downwards	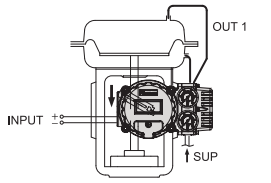

Reverse Acting (RA)	
RA 1 As the input signal increases, Valve stem moves upwards Actuator : RA	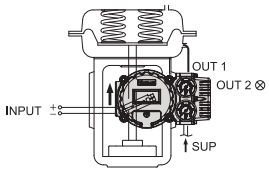 OUT2 must be plugged
RA 2 As the input signal increases, Valve stem moves upwards Actuator : RA	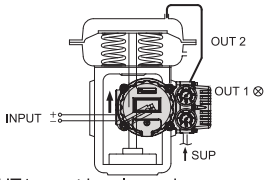 OUT1 must be plugged
RA 3 As the input signal increases, Valve stem moves upwards	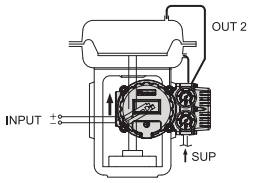

- SS3R (Rotary Type)

Spring Return	Double Acting	Double Acting
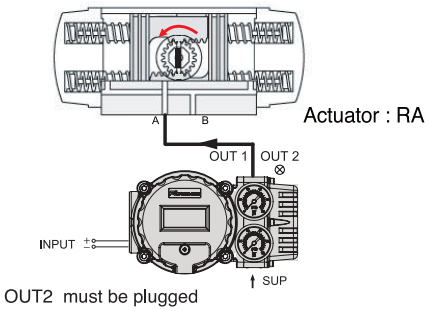 OUT2 must be plugged	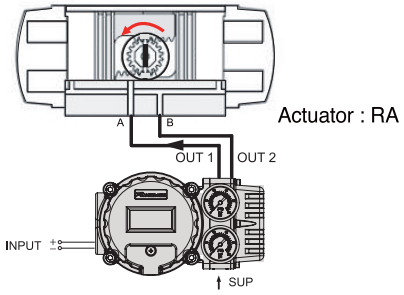	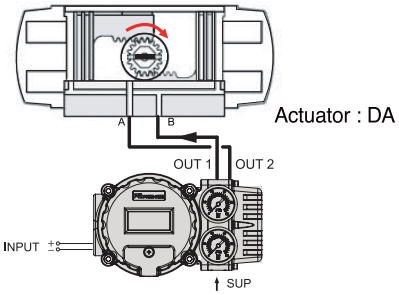
As the input signal increases, Actuator shaft rotates counter-clockwise	As the input signal increases, Actuator shaft rotates counter-clockwise	As the input signal increases, Actuator shaft rotates clockwise

	Spring Return	Double Acting
Reverse Acting	Out1 : piped, Out2 : plugged	Out1 : piped to Actuator port A, Out2 : piped to Actuator port B
Direct Acting	Out1 : plugged, Out2 : piped	Out1 : piped to Actuator port B, Out2 : piped to Actuator port A

SS3 Front Cover Removed

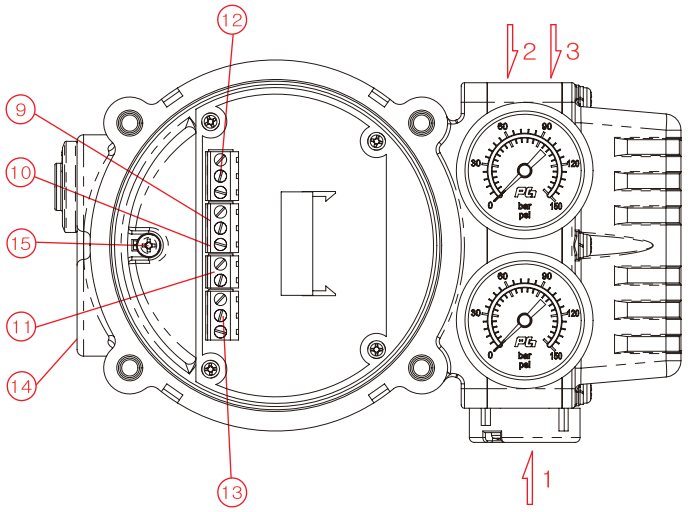

SS3 Front Cover

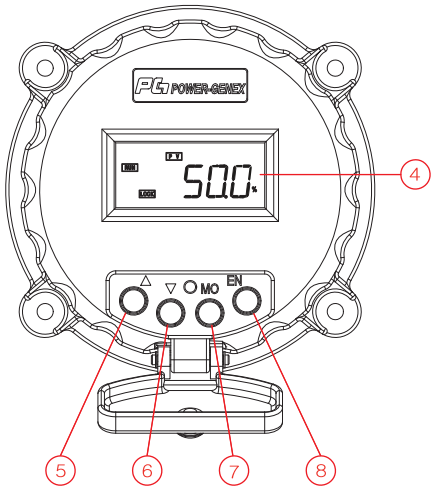

1 : Air supply
2 : OUT 1
3 : OUT 2
4 : Display LCD
5 : Up key
6 : Down key
7 : Mode key
8 : Enter key
9 : Input signal (+, -)
10 : Frame ground
11 : Output signal (+, -)
12 : Alarm limit
13 : Alarm limit
14 : Electrical connections
15 : Ground
16 : Feedback lever

Electrical Connections

1 (+) / 2 (−) — IN. 4-20mA input signal

3 (FG) — Frame Ground

4 (+) / 5 (−) — OUT. 4-20mA output signal

11 (+) / 12 (-) — LS1 : Alarm limit 1

14 (+) / 15 (-) — LS2 : Alarm limit 2

Characteristic Curves

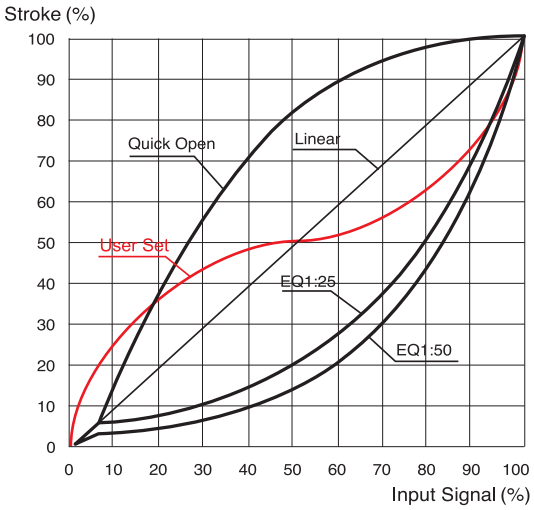

Quick Start and Checking

	Button	Action
Auto - Calibration	MO	Push 5 seconds for auto-calibration
Span	▽DN → ENT ▽DN or △UP ENT → MO	Push ▽DN 5 seconds to change a measured span (Try this option only when a valve doesn't reach a desired position)
Ambient Temp.	ENT	Confirm an ambient temperature surrounding this smart valve positioner

Parameters Diagram

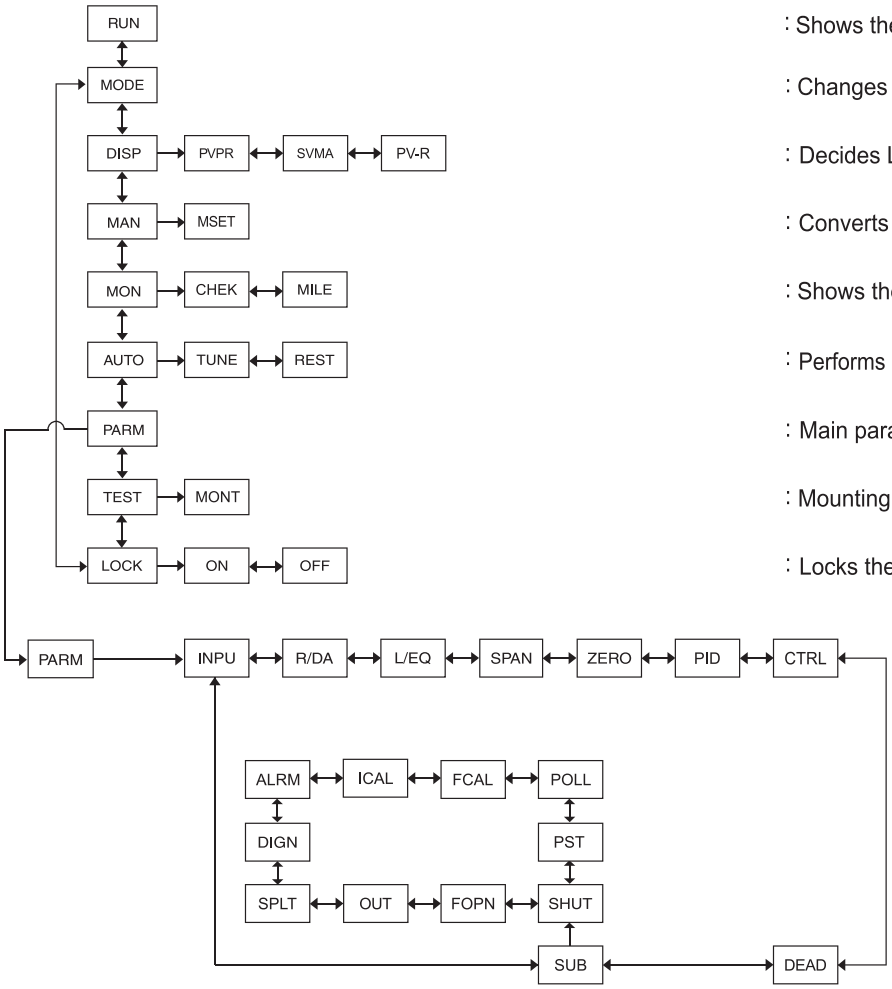

: Shows the operating situation of the positioner

: Changes the parameters

: Decides LCD display mode in mA, % or a reverse way

: Converts to the manual mode

: Shows the selected parameters and a total valve runtime

: Performs auto-calibration and resets all programmed values

: Main parameters

: Mounting test mode

: Locks the set values

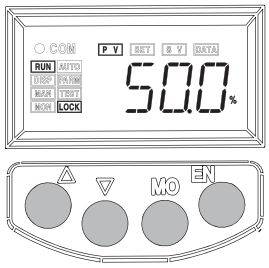

LCD Display

● COM : Hart Communication

Parameter	Description	Fcution	Default
INPU	Input signal	4 ~ 20mA or 20 ~ 4mA	4 ~ 20mA
R/DA	RA/DA	Reverse acting or direct acting	Auto-set
L/EQ	Characteristic	Linear, E.Q.%(1:25 or 1:50), Quick open or User set(17points)	Linear
SPAN	Span adjustment	0 ~ 100%	100%
ZERO	Zero adjustment	0 ~ 99%	0%
PID	P-GN / I-GN / D-GN	Proportional / Integral / Differential gain value	Auto-set
SPED	Response speed	1 ~ 1000	1000
SWST	Slow start	Smooth operation (ON or OFF)	Auto-set
CNLT	Control limit	50 ~ 1250	Auto-set
GCNL	Gap control limit	50 ~ 1250	Auto-set
DEAD	Dead band	0 ~ 9.99%	0.5%
FDGN	D-gain setting for hard mode	D-Gain setting for hard mode	Auto-set
C/MD	NORM / HARD / SMAL	Standard actuator, strong valve packing friction, small actuator	NORM
SHUT	Shut-off	0 ~ 9.9%	0.3%
FOPN	Full-open	0 ~ 9.9%	0.3%
OUT	Output signal	4 ~ 20mA or 20 ~ 4mA	4 ~ 20mA
SPLT	Split range	4 ~ 12mA or 12 ~ 20mA	4 ~ 20mA
DIGN	Display place	Movement to one or two decimal places	1
ALAM	Alarm limit low, high	AL1L / AL1H / AL2L / AL2H	0 ~ 10%, 90 ~ 105%
ICAL	IN4M / IN20	Internal match with 4~20mA input signals from a calibrator	Factory setting
FCAL	FB4M / FB20	Internal match with 4~20mA output signals to a calibrator	Factory setting
POLL	Polling address	HART Communication polling address (0 ~ 15)	0
PST	Partial stroke test	Checks a valve status	OFF

Wiring Alarm Limits

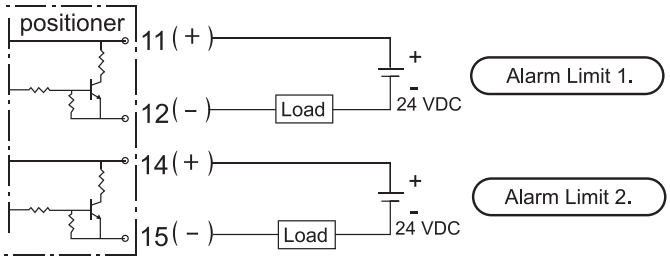

Note that 24 VDC should be supplied for power.

Micro Switches (SPDT)

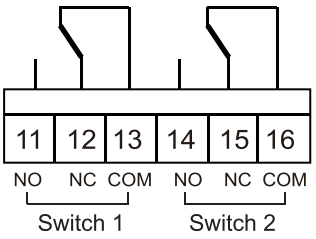

Measuring Output Signal

① With mA loop calibrator

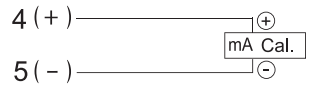

② With mulitimeter (mA)

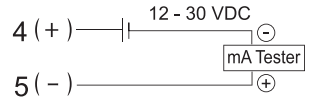

ZERO and SPAN of position feedback are automatically set after auto-calibration process.

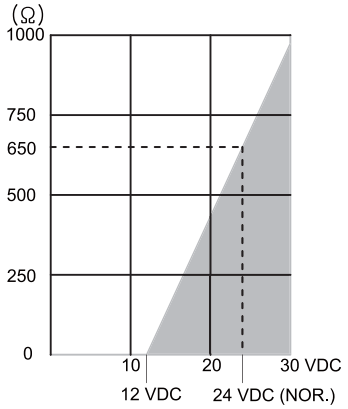

< Transmitter Load Limitations >

Position Transmitter	
Output Signal	4 - 20 mA, 2-wire
Power Supply	12 - 30 VDC
Output Current Limit	30 mA DC
Linearity	1% F.S
Operating Temp.	-30 ~ +80℃

How to Order

SS3 | Actuator Operation | Protection Class | Feedback Lever | Pressure Gauges | By-pass | Position Feedback | Communi cation | Connection Threads | Mounting Bracket | Feedback Pin Guide Lever Set

Description	Code
Actuator Operation :	L : Linear type R : Rotary type
Protection Class :	F : Flameproof IECEx / ATEX / TR-CU Ex d IIC T6 K : Flameproof KC - Ex d IIC T6
Feedback Lever :	
- Linear type :	A : Stroke (5~30mm) B : Stroke (5~65mm) C : Stroke (5~130mm) D : Stroke (80~200mm)
- Rotary type :	F : Fork lever N : NAMUR shaft (direct mounting)
Gauge Block :	0 : Not mounted 1 : 6 bar (90 psi) 2 : 10 bar (150 psi)
By-pass :	N : None (standard) Y : Yes (auto/manual screw)

Description	Code
Position Feedback :	N : None O : Position transmitter (4~20mA output signal) L : 2 x alarm limit S : 2 x SPDT (only for rotary type) M : O + L Q : O + S (only for rotary type)
Communication :	N : None H : HART P : Profibus PA F : Foundation Fieldbus
Connection Threads : (pneumatic - electrical)	3 : PT(Rc) 1/4 - PF(G) 1/2 4 : NPT 1/4 - NPT 1/2 5 : PT(Rc) 1/4 - M20 x 1.5
Mounting Bracket :	N : None L : IEC 60534-6-1 (for SS3L) R : IEC 60534-6-2 (for SS3R) VDI/VDE 3845
Feedback Pin Guide Lever Set : (only for linear type SS3L)	0 : Not included 1 : Included

Dimensions

- SS3L (Linear Type)

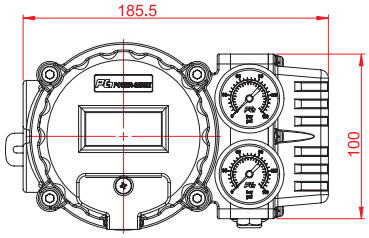

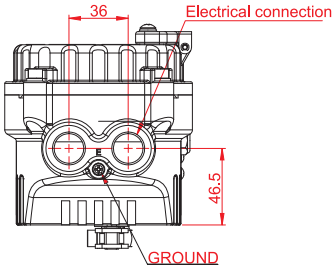

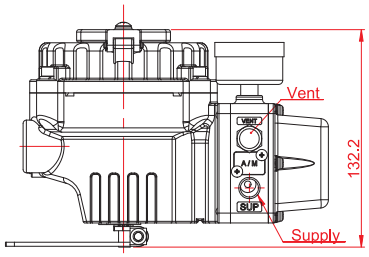

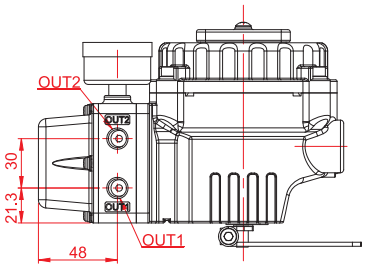

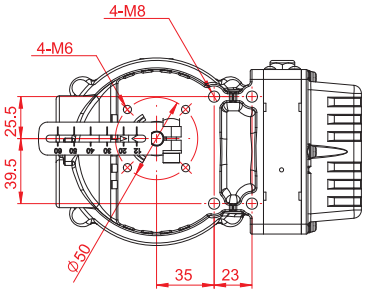

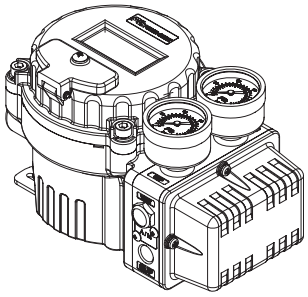

- SS3R (Rotary Type)

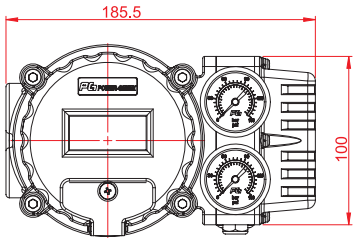

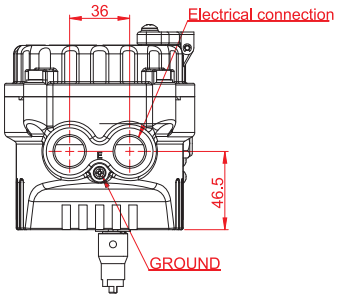

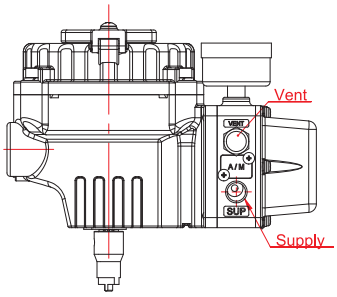

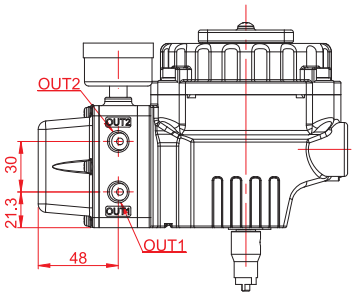

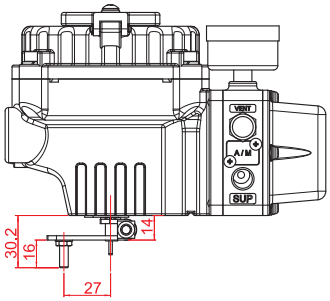

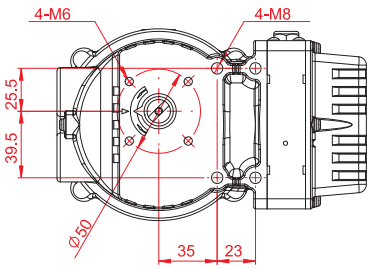

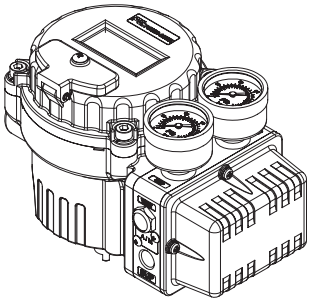

< Fork Lever Type >

Smart Valve Positioner
(stainless steel 316 body)

SS3S Linear / Rotary

< SS3SL & SS3SR >

Specifications

Communication	Without	HART	Profibus-PA	Fieldbus
Input Signal	4 - 20 mA @ 24 VDC		9 - 32 VDC	
Min. / Max. Current	3.6 mA / 50 mA		-	
Current Consumption	-		15mA	16mA
Voltage Drop (Resistance)	8.7 VDC(435Ω)	9.4 VDC(470Ω)		
Stroke / Angle	Linear type : 5 - 130 mm * Rotary type : 25 - 120°			
Air Supply Pressure	1.4 - 7.0 bar (20 - 100 psi)			
Output Pressure Range	0 - 100% of supply air pressure			
Air Capacity	80 ℓ/min = 4.8 N㎥/h = 2.8 scfm (Sup = 1.4 bar) 233 ℓ/min = 14 N㎥/h = 8.2 scfm (Sup = 6 bar)			
Air Consumption	2.8 ℓ/min = 0.17 N㎥/h = 0.1 scfm (Sup = 1.4 ~ 6 bar)			
Characteristic	Linearity < ±0.3% F.S Hysteresis < 0.2% F.S	Sensitivity < 0.2% F.S Repeatability < 0.2% F.S		
Performance Characteristic	Linear, EQ %, Quick open, User set (17 points)			
LCD Indication	4-digit LCD indicator			
Adjustable Speed	1 - 1000 (lowest 1, highest 1000)			
Scan Time	2ms			
Shut-off Value	Range 0 - 10% of position signal			
Valve Action	Direct action(DA) / Reverse action(RA)			
Operating Temperature	- 30 ~ +75℃ (- 22 ~ +167 ℉) **			
Pneumatic Connections	NPT 1/4 (other on request)			
Electrical Connections	NPT 1/2 (other on request)			
Protection Class	Flameproof (IECEx / ATEX / KC Ex d IIC T6)			
Body Material	Stainless steel 316			
Weight	6.5 kg (without bracket)			

* Up to 200mm on request ** -40℃ on request

How to Order

SS3S Actuator Operation — Protection Class | Feedback Lever | Pressure Gauges | By-pass | Position Feedback | Communi cation | Connection Threads | Mounting Bracket | Feedback Pin Guide Lever Set

Description	Code
Actuator Operation :	L : Linear type R : Rotary type
Protection Class :	F : Flameproof IECEx / ATEX / TR-CU Ex d IIC T6 K : Flameproof KC - Ex d IIC T6
Feedback Lever : - Linear type :	A : Stroke (5~30mm) B : Stroke (5~65mm) C : Stroke (5~130mm) D : Stroke (80~200mm)
- Rotary type :	F : Fork lever N : NAMUR shaft (direct mounting)
Gauge Block :	0 : Not mounted 1 : 6 bar (90 psi) 2 : 10 bar (150 psi)
By-pass :	N : None Y : Yes (auto/manual screw)

Description	Code
Position Feedback :	N : None O : Position transmitter (4~20mA output signal) L : 2 x alarm limit S : 2 x SPDT (only for rotary type) M : O + L Q : O + S (only for rotary type)
Communication :	N : None H : HART P : Profibus PA F : Fieldbus Foundation
Connection Threads : (pneumatic - electrical)	4 : NPT 1/4 - NPT 1/2
Mounting Bracket :	N : None L : IEC 60534-6-1 (for SS3SL) R : IEC 60534-6-2 (for SS3SR) VDI/VDE 3845
Feedback Pin Guide Lever Set : (only for linear type SS3SL)	0 : Not included 1 : Included

< SS3L-IPC >

Specifications

Communication	Without	HART	Profibus-PA	Fieldbus
Input Signal	4 - 20 mA @ 24 VDC		9 - 32 VDC	
Min. / Max. Current	3.6 mA / 50 mA		-	
Current Consumption	-		15mA	16mA
Voltage Drop (Resistance)	8.9 VDC(445Ω)	9.4 VDC(470Ω)		
Air Supply Pressure	1.4 - 7.0 bar (20 - 100 psi)			
Air Capacity	80 ℓ/min = 4.8 N㎥/h = 2.8 scfm (Sup = 1.4 bar) 233 ℓ/min = 14 N㎥/h = 8.2 scfm (Sup = 6 bar)			
Air Consumption	2 ℓ/min = 0.12 N㎥/h = 0.07 scfm (Sup = 1.4 ~ 6 bar)			
Characteristic	Linearity < ±0.3% F.S Hysteresis < 0.2% F.S		Sensitivity < 0.2% F.S Repeatability < 0.2% F.S	
Performance Characteristic	Linear			
LCD Indication	4-digit LCD indicator			
Scan Time	2ms			
Valve Action	Direct action(DA) / Reverse action(RA)			
Operating Temperature	- 30 ~ +75℃ (- 22 ~ +167 ℉) *			
Pneumatic Connections	PT 1/4, NPT 1/4			
Electrical Connections	PF 1/2, NPT 1/2			
Protection Class	Flameproof (IECEx / ATEX / KC Ex d IIC T6)			
Body Material	Aluminum die-cast / Stainless steel 316			
Weight	2.8 kg			

* -40℃ on request

How to Order

SS3 | Actuator Operation | — | Protection Class | Feedback Lever | Pressure Gauges | By-pass | Position Feedback | Communi cation | Connection Threads | Mounting Bracket | — | Output Pressure

Description	Code
Actuator Operation :	L : Aluminum die-cast SL : Stainless steel 316
Protection Class :	F : Flameproof IECEx / ATEX / TR-CU Ex d IIC T6 K : Flameproof KC - Ex d IIC T6
Feedback Lever :	X : Not applicable
Gauge Block : (Supply pressure gauge)	1 : 6 bar (90 psi) 2 : 10 bar (150 psi)
By-pass :	N : None Y : Yes (auto/manual screw)

Description	Code
Position Feedback :	N : None O : Position transmitter (4~20mA output signal)
Communication :	N : None H : HART P : Profibus PA F : Fieldbus Foundation
Connection Threads : (pneumatic - electrical)	3 : PT 1/4 - PF 1/2 4 : NPT 1/4 - NPT 1/2
Mounting Bracket :	N : None
Output Pressure :	21 : 3...15 psi

SS5 Linear / Rotary

Perfect combination with reliable fail freeze function and smart performance with innovative durable coil drive

FAIL FREEZE

Features

- "Fail Freeze" function to help the valve stay at the last position on the electrical power supply or the pneumatic supply air by accident
- Easy and quick auto-calibration
- Detecting RA (reverse acting) or DA (direct acting) automatically regardless of wrong air connections
- Available to use for single or double acting without any special adjustments
- Compact design allowing to be installed on small actuators
- Providing error messages against performance failures
- Possible to test the actuator with any fixed signal under a test mode
- Programmable characteristic curve with 17 points
- Wide operating temperature range -30 ~ +80℃
- Improved control of high-friction globe and ball valves by eliminating an overshoot and a hunting
- Low air consumption
- Providing a mounting bracket to meet IEC 60534-6-1 for linear valves
- Supporting a NAMUR mounting pattern VDI/VDE 3845 (IEC 60534-6-2) and providing a multi-size mounting bracket for rotary valves

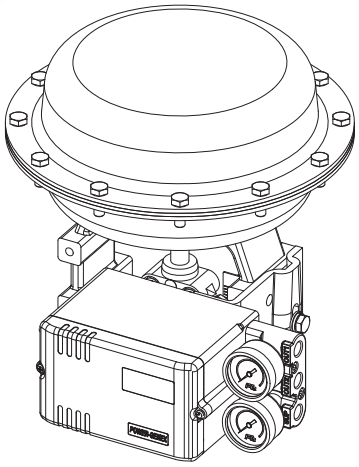

- SS5L (Linear Type)

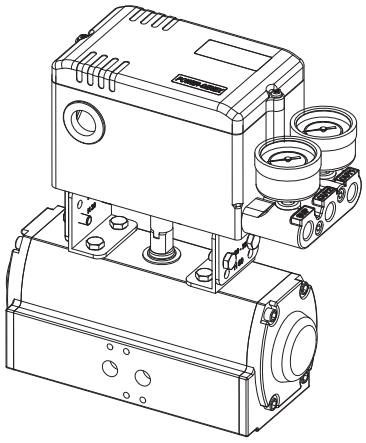

- SS5R (Rotary Type)

Options

- Output position transmitter (4 - 20 mA)
- 2 x alarm limit or micro switch (SPDT)
- Explosion proof type (IECEx / ATEX / KC Ex ia IIC T6/T5 - in progress)
- HART communication
- Profibus communication (in progress)
- Fieldbus Foundation communication (in progress)

Specifications

Input Signal	4 - 20 mA @ 24 VDC
Min. / Max. Current	3.6 mA / 50 mA
Voltage Drop (Resistance)	Without Hart : 8.9 VDC (445Ω @ 20 mA) With Hart : 9.4 VDC (470Ω @ 20 mA)
Stroke / Angle	Linear type : 5 - 130 mm* Rotary type : 25 - 120°
Air Supply Pressure	1.4 - 7 bar (20 - 100 psi), filtered, compressed dry and non-oiled to meet Class 3 of ISO 8573-1
Output Pressure Range	0 - 100% of supply air pressure
Air Capacity	80 ℓ/min = 4.8 N㎥/h = 2.8 scfm (Sup = 1.4 bar) 233 ℓ/min = 14 N㎥/h = 8.2 scfm (Sup = 6 bar)
Air Consumption	2 ℓ/min = 0.12 N㎥/h = 0.07 scfm (Sup = 1.4 ~ 6 bar)
Characteristic	Linearity < ±0.3% F.S Sensitivity < 0.2% F.S Hysteresis < 0.2% F.S Repeatability < 0.2% F.S
Performance Characteristic	Linear, EQ %, Quick open, User set (17 points)
LCD Indication	4-digit LCD indicator
Adjustable Speed	1 - 1000 (lowest 1, highest 1000)
Scan Time	2ms
Shut-off Value	Range 0 - 10% of position signal
Valve Action	Direct action (DA) / Reverse action (RA)
Operating Temperature	- 30 ~ +80℃ (- 22 ~ +176 ℉)**
Pneumatic Connections	PT(Rc) 1/4 or NPT 1/4
Electrical Connections	2 x PF(G) 1/2, NPT 1/2, M20 x 1.5
Protection Class	IP66, intrinsically safe (IECEx / ATEX / KC Exia IIC T6/T5)
Body Material	Aluminum die-cast / powder-painted
Weight	1.6 kg

* Up to 200mm on request ** -40℃ on request

Principle of Operation

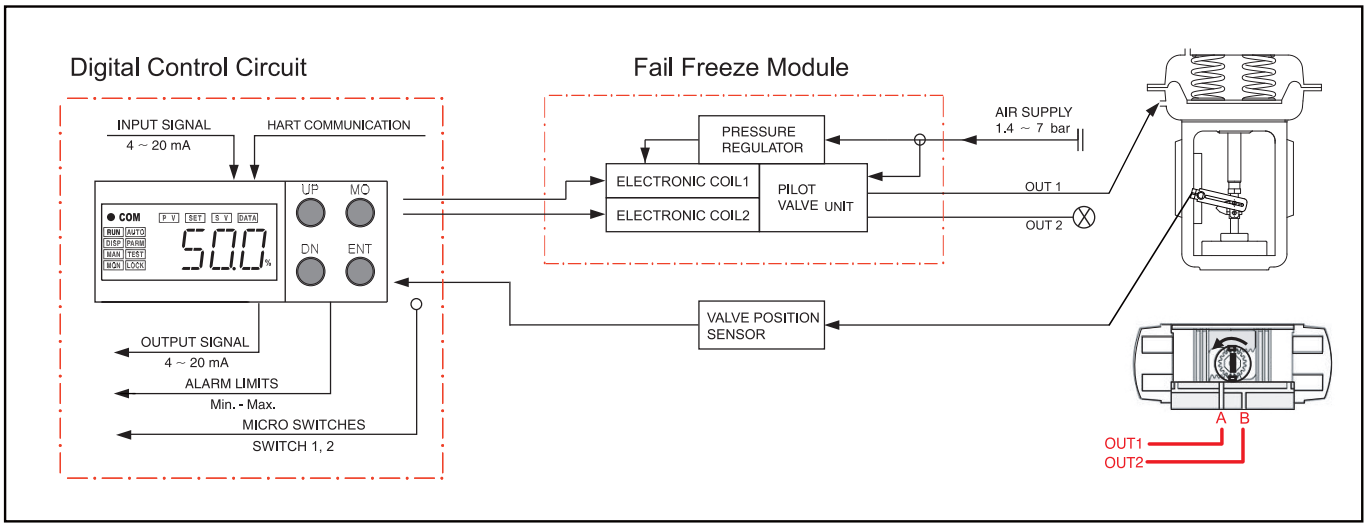

If 4-20mA input signal is supplied, the microprocessor compares the input signals and the feedback values and send the control signals to the I/P converter. A supply air is converted to the pneumatic signals by two electronic coils and moves the pilot valve until the control valve reaches the desired position. In case of a signal failure or a supply air failure, a venting air is blocked inside of the pilot valve and the valve stays at the last position because of an existing supply air pressure between the positioner and the actuator.

SS5 Front Cover Removed

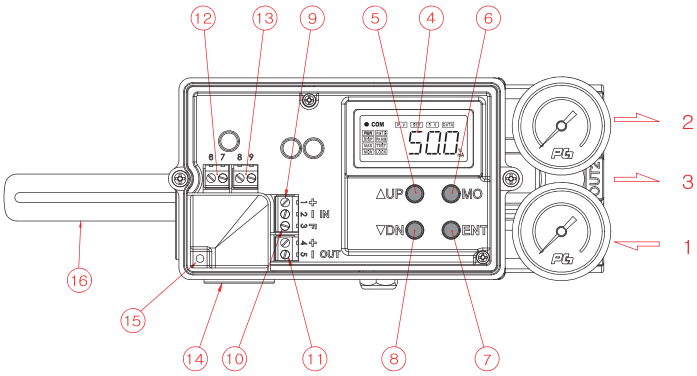

1 : Air supply
2 : OUT 1
3 : OUT 2
4 : Display LCD
5 : Up key
6 : Mode key
7 : Enter key
8 : Down key
9 : Input signal (+, -)
10 : Frame ground
11 : Output signal (+, -)
12 : Alarm limit 1
13 : Alarm limit 2
14 : Electrical connections
15 : Ground
16 : Feedback lever

Electrical Connections

1 (+) / 2 (−) — IN. 4-20mA input signal
3 (FG) — Frame Ground
4 (+) / 5 (−) — OUT. 4-20mA output signal
6 (+) / 7 (−) — LS1. (Low) Alarm limit 1
8 (+) / 9 (−) — LS2.(High) Alarm limit 2

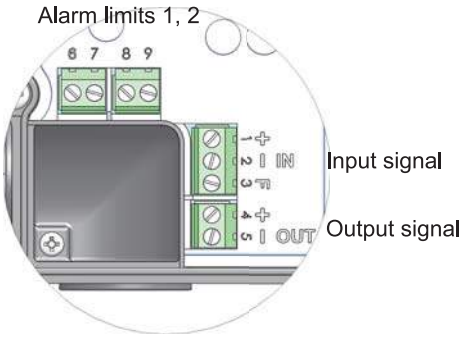

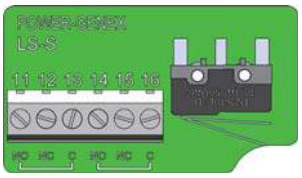

Micro switches 1, 2

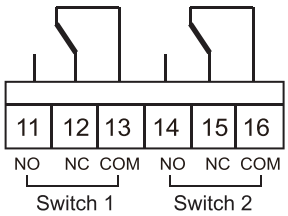

How to Order

SS5 | Actuator Operation | — | Protection Class | Feedback Lever | Pressure Gauges | Position Feedback | Communi -cation | Connection Threads | Mounting Bracket | Feedback Pin Guide Lever Set

Description	Code
Actuator Operation :	L : Linear type R : Rotary type
Protection Class :	I : Intrinsically safe (IECEx Ex ia IIC T6/T5, ATEX Ex ia IIC T6/T5) K : Intrinsically safe (KC Ex ia IIC T6/T5) W: Weatherproof to IP66
Feedback Lever : - Linear Type	A : Stroke (5 ~ 30mm) B : Stroke (5 ~ 65mm) C : Stroke (5 ~ 130mm) D : Stroke (80 ~ 200mm)
- Rotary Type	F : Fork lever N : Namur shaft (direct mounting)
Pressure Gauge Block :	0 : Not mounted 1 : 6 bar (90 psi) 2 : 10 bar (150 psi)

Description	Code
Position Feedback :	N : None O : Position transmitter (4 ~ 20mA output signal) L : 2 x alarm limit S : 2 x micro switch (SPDT) M : O+L Q : O+S
Communication :	N : None H : HART
Connection Threads : (pneumatic - electrical)	3 : PT(Rc) 1/4 – PF(G)1/2 4 : NPT 1/4 – NPT 1/2 5 : PT(Rc) 1/4 – M20 x 1.5
Mounting Bracket :	N : None L : IEC 60534-6-1 (for SS5L) R : VDI/VDE 3845 / IEC 60534-6-2 (for SS5R)
Feedback Pin Guide Lever Set : (only for linear type SS5L)	0 : Not included 1 : Included

Dimensions

- SS5L (Linear Type)

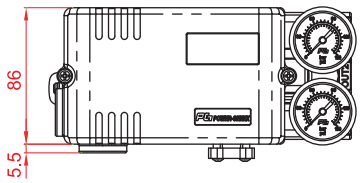

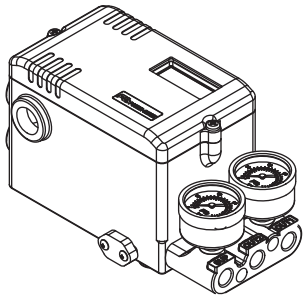

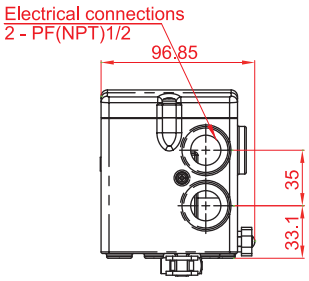

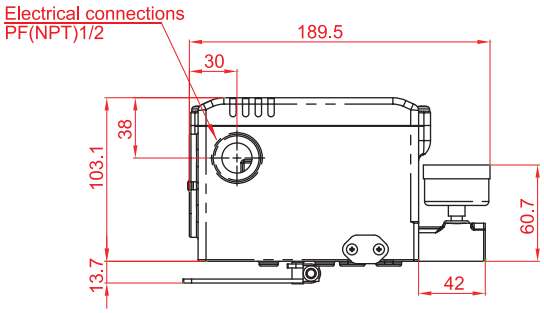

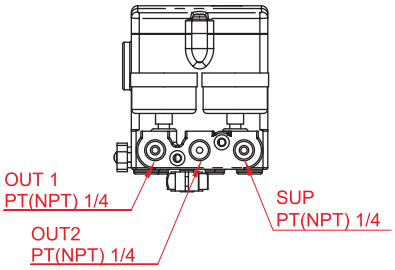

A,B,C,D TYPE LEVER

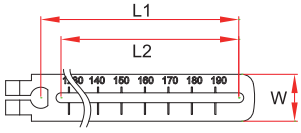

LEVER TYPE	L1(mm)	L2(mm)	W(mm)
A	30	21.40	20
B	65	55.90	20
C	130	121.40	20
D	200	191.40	20

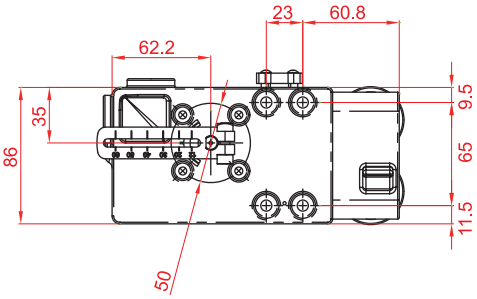

- SS5R (Rotary Type)

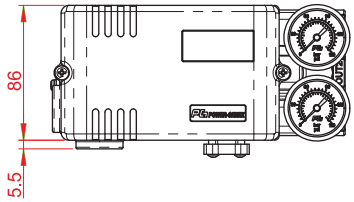

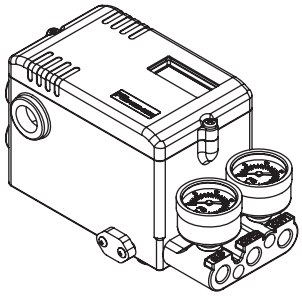

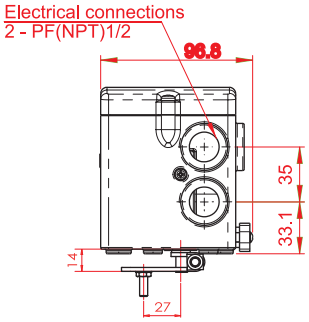

< Fork Lever Type >

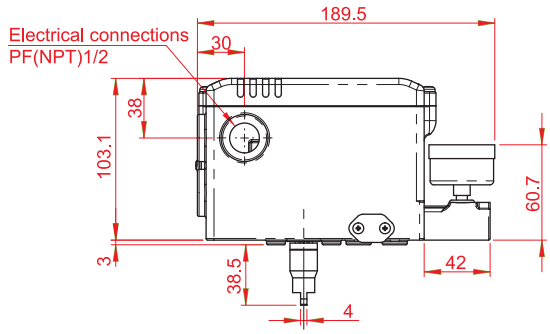

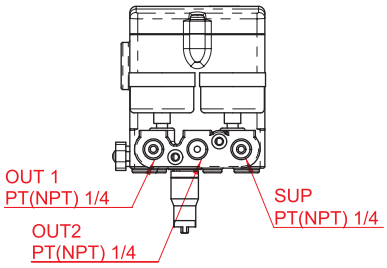

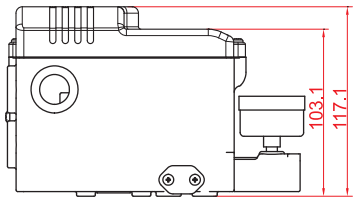

< SS5 with 2 x SPDT Micro S/W >

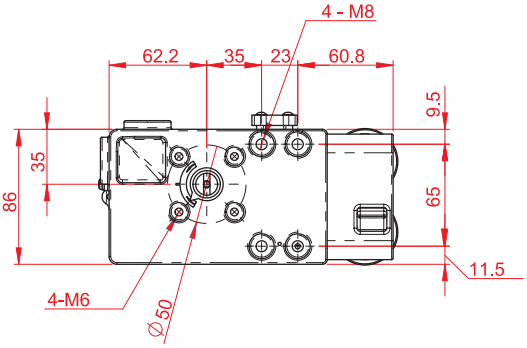

SS Linear / Rotary

Smartest valve control device meeting a dynamic performance and a precise setting with a piezoelectric technology and an optimized auto-calibration program

Features

- Auto-Calibration for optimum conditions
- Precise control performance and high dynamic response
- Easy operation with four-key pads and full text graphical LCD
- Single and double acting
- Low air consumption due to piezo electric microvalve
- Pressure regulator built-in to eliminate variations in supply air pressure
- Problem-free characteristics on a small actuator
- High resistance against shock and vibration
- Mounting on linear actuators according to IEC 534

Options

- Position transmitter (4...20mA output signal)
- 2 × alarm limit (Min., Max.)
- Explosion proof type (KC Ex d IIB+H_2 T6 IP66)
- HART communication (FSK)

Specifications

Input Signal	4 - 20 mA @ 24 VDC
Voltage Drop	8.5 VDC @ 20 mA (425 Ω)
Min. / Max. Current	3.6 mA / 50 mA
Required Load Voltage (≒ Ω @ 20mA)	Without HART : 8.5V (≒425 Ω) With HART : 9.2V (≒460 Ω)
Air Supply Pressure	1.4 - 7.0 bar (20 - 100 psi) Filtered compressed dry and non-oiled air
Output Pressure	0 - 100% supply air pressure / single or double action
Shut-off Value	Range 0 - 5% of position signal
Air Capacity	80 ℓ/min = 4.8 N㎥/h = 2.8 scfm (Sup = 1.4 bar)
Air Consumption	1.3 ℓ/min = 0.08 N㎥/h = 0.05 scfm (Sup = 1.4 ~ 6 bar)
Humidity Limits	< 90% RH, non-condensing
Stroke / Angle	5 ~ 80mm (max. up to 150mm) 0 ~ 90° (max. up to 100°)
Adjustable Speed	1 - 1000 (lowest 1, highest 1000)
LCD Indication	4-digit LCD indicator
Scan Time	2 ms
Valve Action	Position 0 - 100% / direct action (DA) / reverse action (RA)
Characteristic Curve	Linear, E.Q.% (1:25 or 1:50), Quick open Linearity < = 0.3% / sensitivity < = 0.2% / hysteresis < = 0.2%
Operating Temperature	- 30 ~ +70℃
Protection Class	IP66, flameproof (KC Ex d IIB+H_2 T6 IP66)
Body Material	Aluminum die-cast
Pneumatic Connections	PT(Rc) 1/4 or NPT 1/4
Electrical Connections	2 x PF(G) 1/2 or NPT 1/2
Weight	2.5 kg

Note : Equal percentage or Quick-open option is available. Please contact for more details

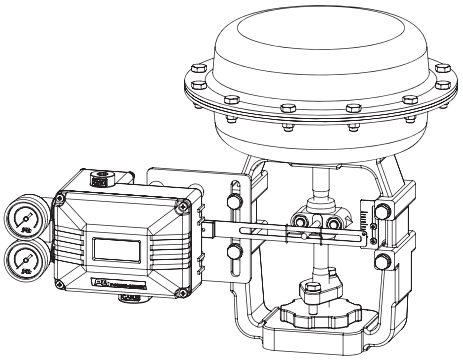

- SSL (Linear Type)

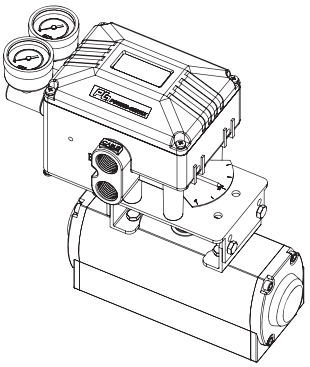

- SSR (Rotary Type)

Board View

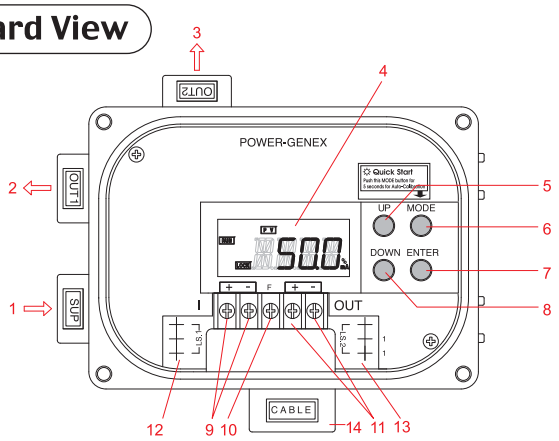

1 : Air supply
2 : Output 1
3 : Output 2
4 : Display LCD
5 : Up key
6 : Mode key
7 : Enter key
8 : Down key
9 : Input signal (+,-)
10 : Frame ground
11 : Ouput signal (+ -)
12 : Alarm limit 1
13 : Alarm limit 2
14 : Electrical connections

Air Connections

- SSL (Linear Type)

Direct Acting(DA)	
As the input signal increases, Valve stem moves downwards Actuator : DA Switch position : DA	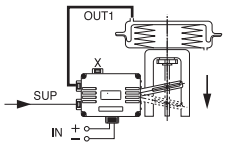 OUT2 must be plugged
As the input signal increases, Valve stem moves downwards Actuator : DA Switch position : DA	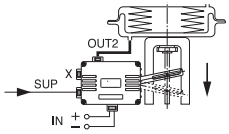 OUT1 must be plugged
As the input signal increases, Valve stem moves downwards Switch position : DA	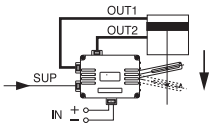

Reverse Acting(RA)	
As the input signal increases, Valve stem moves upwards Actuator : RA Switch position : RA	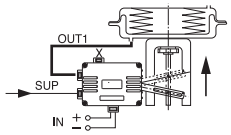 OUT2 must be plugged
As the input signal increases, Valve stem moves upwards Actuator : RA Switch position : RA	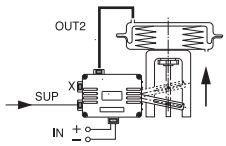 OUT1 must be plugged
As the input signal increases, Valve stem moves upwards Switch position : RA	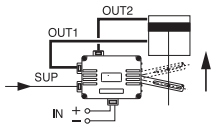

- SSR (Rotary Type)

Spring Return	Double Acting	Double Acting
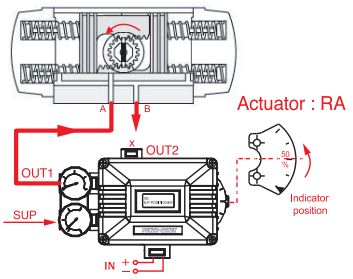	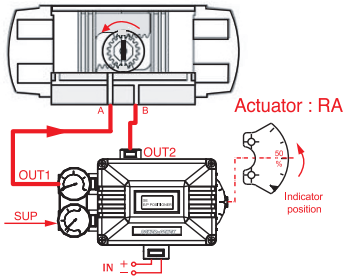	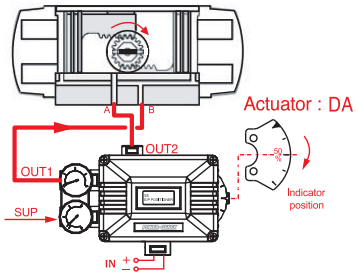
As the input signal increases, Actuator shaft rotates counter-clockwise	As the input signal increases, Actuator shaft rotates counter-clockwise	As the input signal increases, Actuator shaft rotates clockwise

	Spring Return	Double Acting
Reverse Acting	Out1 : piped, Out2 : plugged	Out1 : piped to Actuator port A, Out2 : piped to Actuator port B
Direct Acting	Out1 : plugged, Out2 : piped	Out1 : piped to Actuator port B, Out2 : piped to Actuator port A

Measuring 4–20mA Output Signal

1) Specifications

Output Signal	4 - 20 mA, 2 - wire
Power Supply Rating	15 - 30V DC
Recommended Power Supply	24V DC
Operating Temperature	-20 - +70℃
Input Impedance	0 - 430 Ω
Characteristic	Linear
Linearity	1.0 % F.S.
Hysteresis	0.5 % F.S.
Repeatability	± 0.5 % F.S.
Adjustment	Zero and span
Rotary Angle	50...90° (max. 100°)

2) With mA Loop Calibrator

3) With Multi-Meter

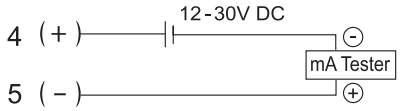

Electrical Connections

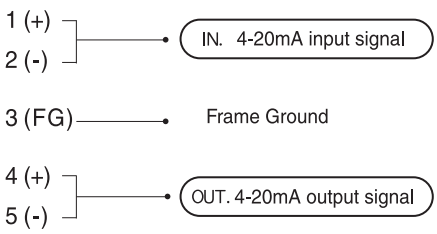

Setting Alarm Limits

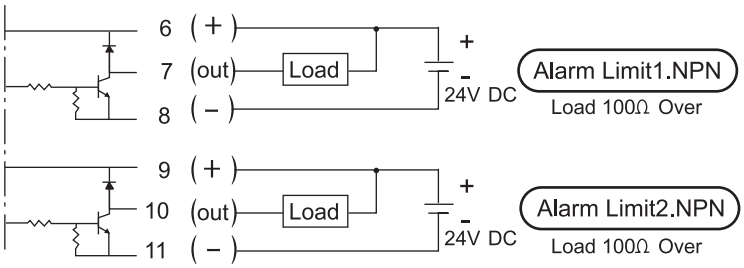

How to Order

SS	Actuator Operation	—	Protection Class	Feedback Lever	Pressure Gauge (SUP. OUT)	Position Feedback	HART Communi-cation	Connection Threads	Mounting Bracket

Description	Code
Actuator Operation :	L : Linear type R : Rotary type
Protection Class :	F : Flameproof (KC Ex d IIB+H_2 T6 IP66) W : Weatherproof to IP66
Feedback Lever :	A : Stroke (5~40mm) B : Stroke (5~80mm) C : Stroke (up to 150mm) F : Fork lever N : NAMUR shaft(direct mounting)
Presure Gauge :	1 : 6 bar (90 psi) 2 : 10 bar (150 psi)

Description	Code
Position Feedback :	N : None O : Position transmitter (4~20mA output signal) L : 2 x alarm limit M : O + L
HART Communication :	N : None H : HART Communication
Connection Threads : (pneumatic - electrical)	3 : PT(Rc) 1/4 - PF(G) 1/2 4 : NPT 1/4 - NPT 1/2 5 : PT(Rc) 1/4 - M20 x 1.5
Mounting Bracket :	N : None L : DIN / IEC 534 R : Multi-size bracket for DIN VDI/VDE 3845 (130x30x50 bracket on request)

Dimensions

- SSL (Linear Type)

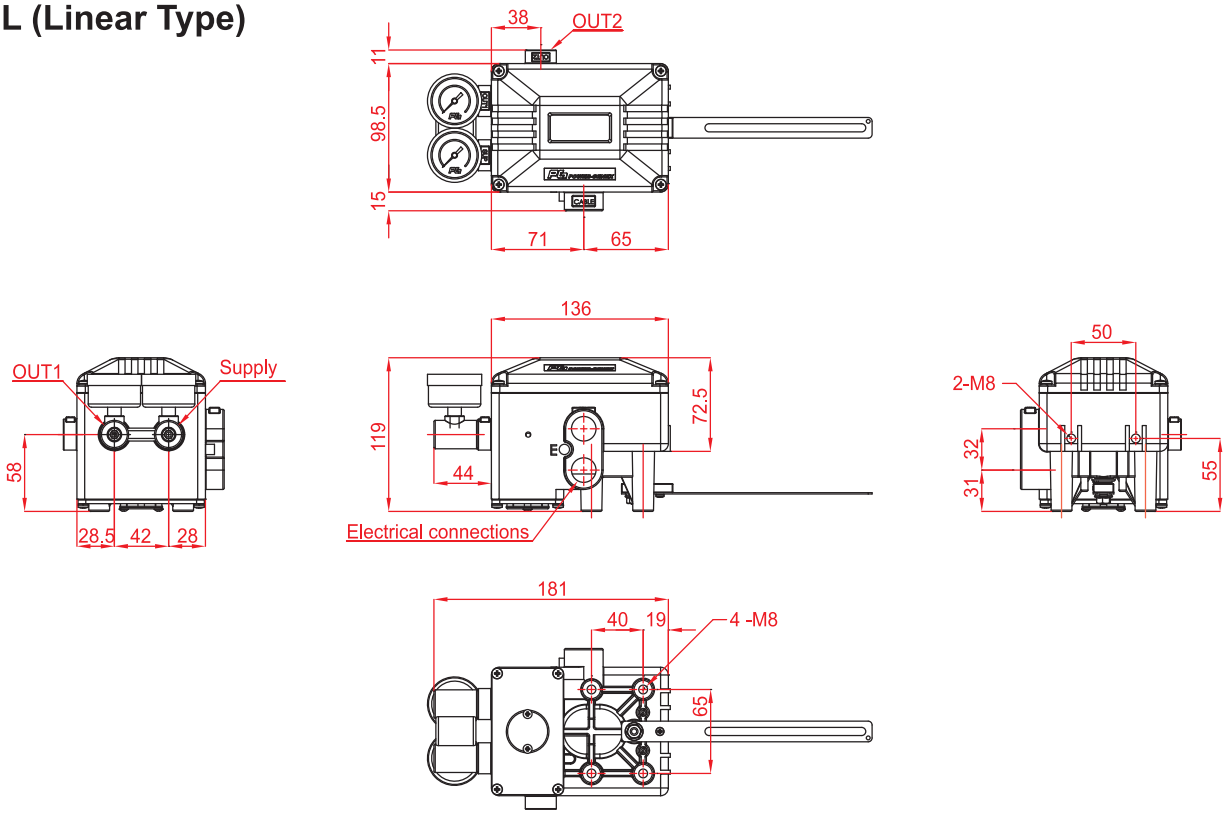

- SSR (Rotary Type)

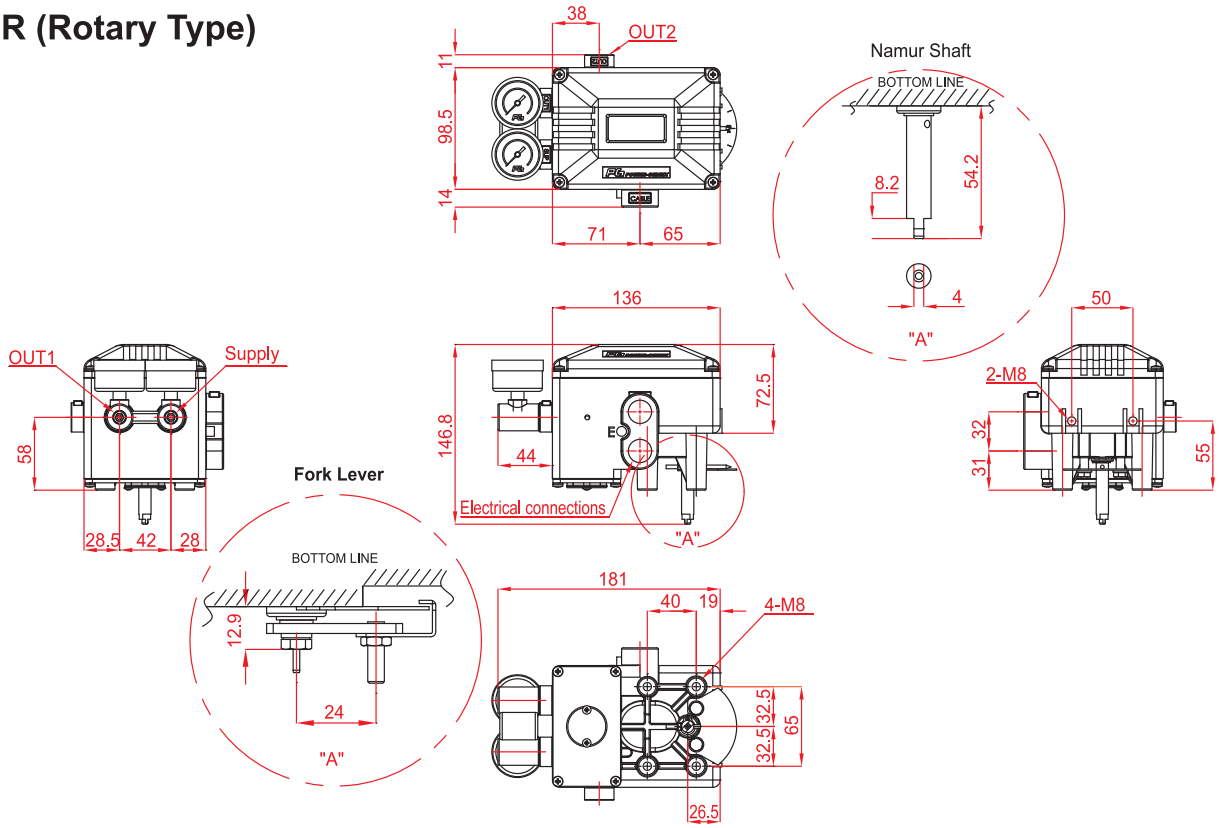

Robust valve control device giving a confidence in reliable performance and outstanding durability under harsh working environments

Features

- Easy maintenance
- Precise calibration with simple SPAN and ZERO adjustments
- Simple conversion to direct acting or reverse acting
- 1/2 split range available
- Rugged aluminum housing with corrosion-resistant coating
- Vibration resistant design
- Stainless steel gauges standard
- Restricted pilot valve orifice kit for small actuators included
- KC-certified flameproof Ex dmb IIB+H_2 T6
  - NEPSI-certified flameproof Ex dmb IIB+H_2 T6
  - IECEx-certified flameproof Ex dmb IIC T6/T5
  - ATEX / TR-CU-certified flameproof Ex dmb IIC T6/T5
  - KC-certified flameproof Ex dmb IIC T6/T5
  - IECEx-certified intrinsically safe Ex ia IIC T6
  - ATEX / TR-CU-certified flameproof Ex ia IIC T6
  - KC-certified intrinsically safe Ex ia IIC T6

Specifications

	EPL	
	Linear Type (Lever Feedback)	
	Single	Double
Input Signal	4~20 mA DC (Note. 1)	
Input Resistance	235±15Ω	
Air Supply	Max. 7.0 bar (100 psi) free of oil, water, and moisture	
Standard Stroke	10~80mm (Note. 2)	
Pneumatic Connections	PT(Rc) 1/4 or NPT 1/4	
Electrical Connections	PF(G) 1/2 or NPT 1/2	
Protection Class	Ex dmb IIB+H_2 T6 / Ex dmb IIC T6/T5 Ex ia IIC T6 / IP66	
Ambient Temperature	-20 ~ +70℃ (Note. 3)	
Pressure Gauge	Stainless steel	
Output Characteristics	Linear	
Linearity	Within ±1.0 % F.S	Within ±1.5 % F.S
Sensitivity	Within ±0.2 % F.S	Within ±0.5 % F.S
Hysteresis	Within 1.0 % F.S	
Repeatability	Within ±0.5 % F.S	
Air Consumption	5 LPM (Sup. 1.4 kgf/㎠)	
Flow Capacity	80 LPM (Sup. 1.4 kgf/㎠)	
Material	Aluminum die-cast	
Weight	3.3 kg (with terminal box) 3.0 kg (without terminal box)	

Options

- Position transmitter (4...20 mA ouput signal)
- High temperature (+120℃)
- Low temperature (-40℃)

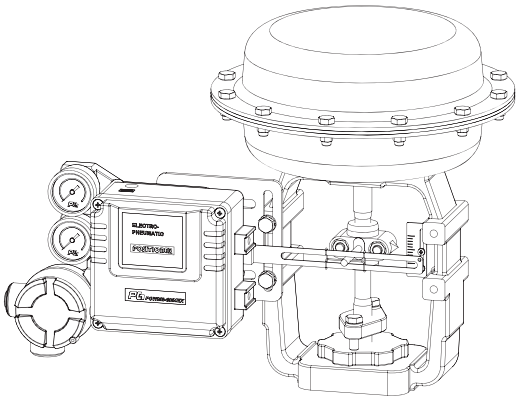

Note : 1) 1/2 spilt range is available for 4~12mA input signal or 12~20mA input signal
2) Feedback lever can be extended to stroke 80 ~ 150mm
3) Temperature option : up to +120℃ without feedback options
up to +85℃ with feedback options
up to -40℃ without feedback options

Position Transmitter Options (Built-in Type)

1. Board View

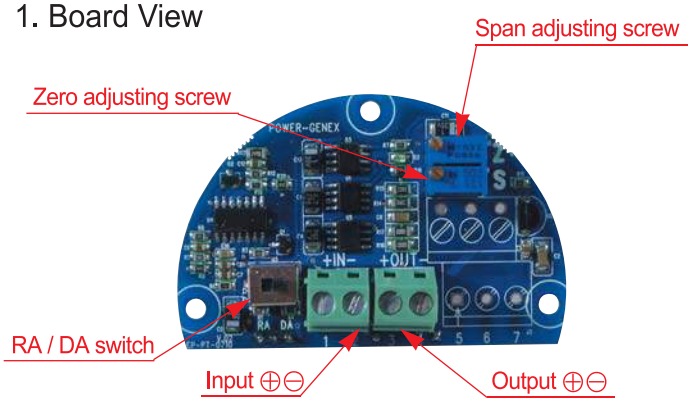

< Analog Position Transmitter >

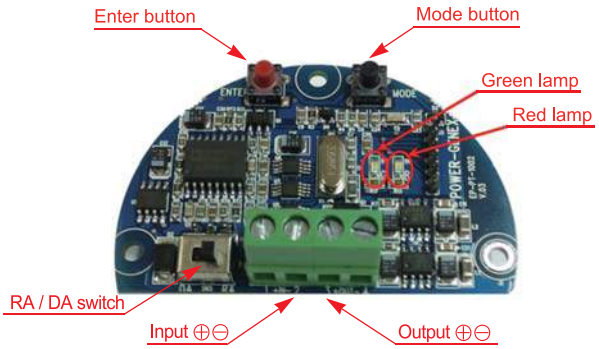

< Smart Position Transmitter >
(Zero / Span Auto Setting)

2. Position Transmitter (4-20mA output signal)

a. Specifications

Power Supply Rating	5.5 - 30 VDC loop power
Recommended Power Supply	24 VDC
Output Signal	4 - 20 mA, 2-wire
Operating Temperature	-20℃ ~ +85℃
Load Impedance	0 ~ 600 ohms
Max. Output	30 mA DC
Linearity	±1.0 %
Hysteresis	1.0 % of full scale
Repeatability	±0.5 % of full scale
Adjustment	Zero and Span in terminal box

b. with mA calibrator

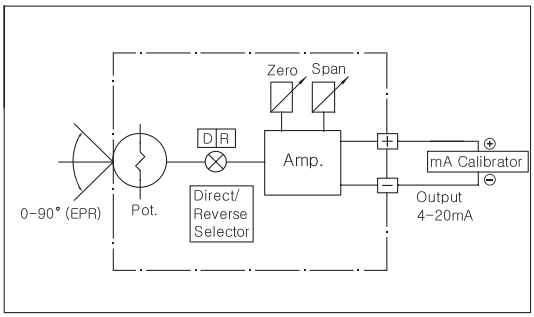

c. with multimeter

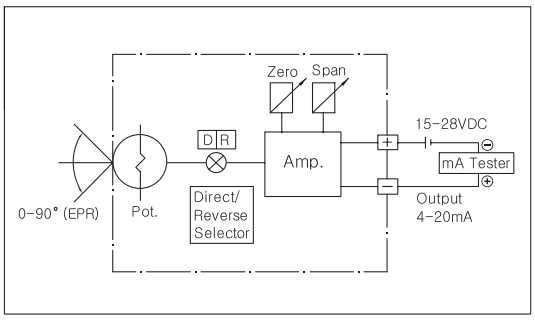

3. Wiring Diagram

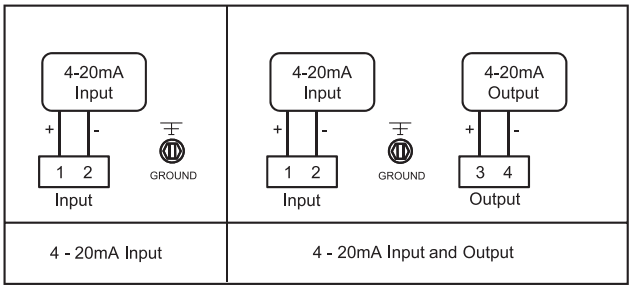

Application for Limit Switches (External Type)

1) With explosion proof PTP-L

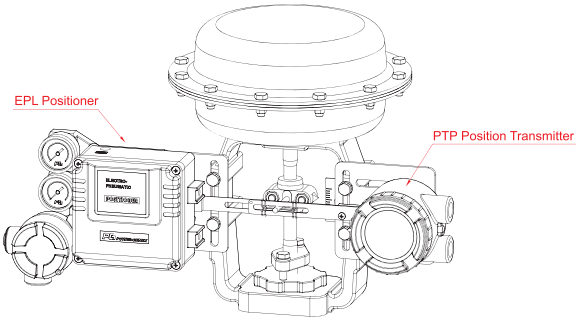

2) With non-explosion proof LSB-200

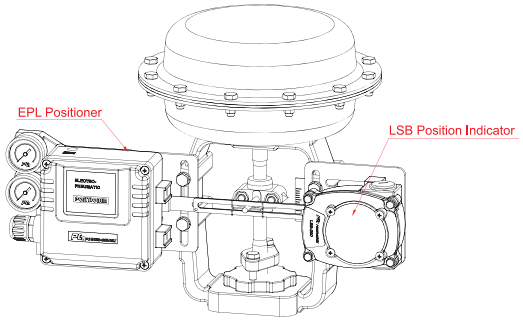

Mounting

1. Install the EPL positioner so that the angle between the valve stem and the feedback lever can be 90° at 12mA input signal (50%) as shown to the right.
2. The operating angle of the EPL feedback lever is minimum 10° to maximum 30°.

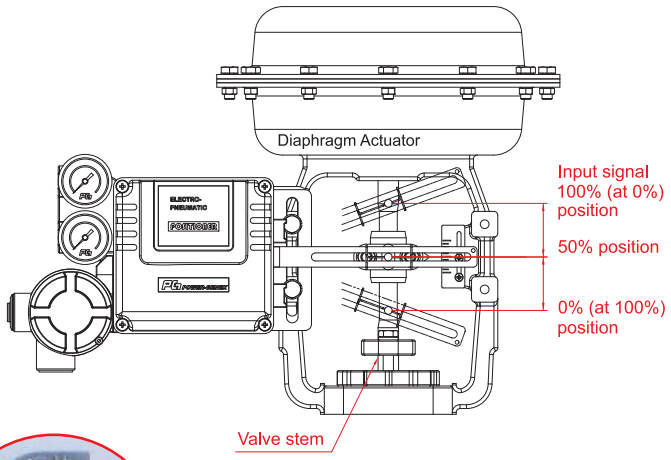

Internal View

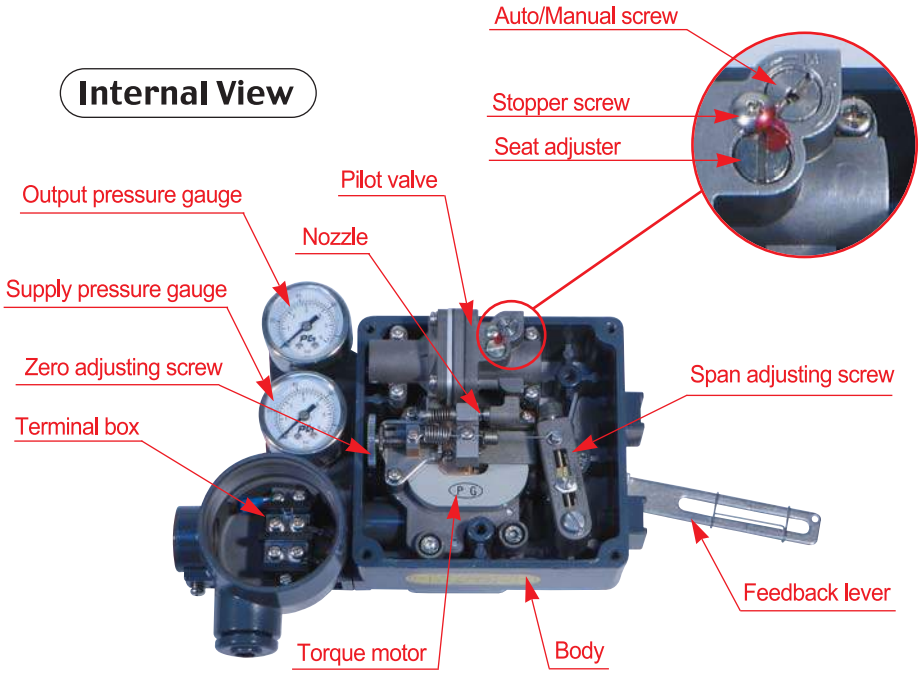

Air Connections

Direct Acting (DA)

As the input signal increases, Valve stem moves downwards Actuator : **DA** Connection : out 1	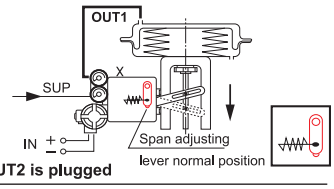
As the input signal increases, Valve stem moves downwards Actuator : **DA** Connection : out 2	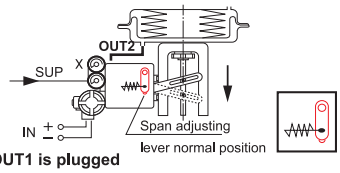
As the input signal increases, Valve stem moves downwards	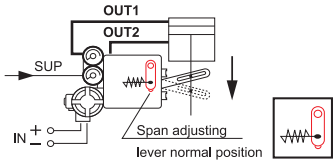

Reverse Acting (RA)

As the input signal increases, Valve stem moves upwards Actuator : **RA** Connection : out 2	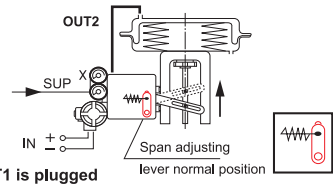
As the input signal increases, Valve stem moves upwards Actuator : **RA** Connection : out 1	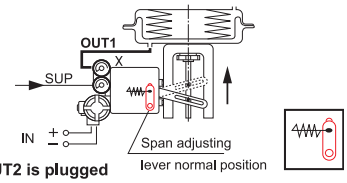
As the input signal increases, Valve stem moves upwards	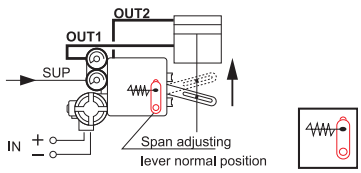

How to Order

EPL –	Protection Class	Feedback Lever	Pressure Gauge (SUP. OUT)	Pilot Valve Orifice	Position Feedback	Connection Threads	Operating Temp.	Mounting Bracket

Description	Code
Protection Class :	F : KC / NEPSI flameproof Ex dmb IIB+H_2 T6 A : KC flameproof Ex dmb IIC T6/T5 D : IECEx / ATEX / TR-CU flameproof Ex dmb IIC T6/T5 I : IECEx / ATEX / TR-CU / KC intrinsically safe Ex ia IIC T6 W : Weatherproof to IP66
Feedback Lever :	A : Stroke 10 ~ 40mm B : Stroke 10 ~ 80mm C : Stroke 80 ~ 150mm
Presure Gauge :	1 : 6 bar (90 psi) 2 : 10 bar (150 psi)
Pilot Valve Orifice :	S : Standard(Actuator volume over 180㎤) M : Small orifice (ϕ1.0 or ϕ0.7) (Actuator volume over 90 ~180㎤)

Description	Code
Position Feedback : (only for weatherproof type)	N : None (standard) O : Analog position transmitter (4 ~ 20mA output signal) S : Smart position transmitter (4 ~ 20mA output signal)
Connection Threads : (pneumatic - electrical)	3 : PT(Rc) 1/4 - PF(G) 1/2 (standard) 4 : NPT 1/4 - NPT 1/2 5 : PT(Rc) 1/4 - M20 x 1.5
Operating Temperature : (only for weatherproof type)	T : 70℃(standard) H : 120℃(without position feedback option) 85℃(with position feedback option) L : - 40℃(without position feedback option)
Mounting Bracket :	N : None L : IEC 60534-6-1

Dimensions

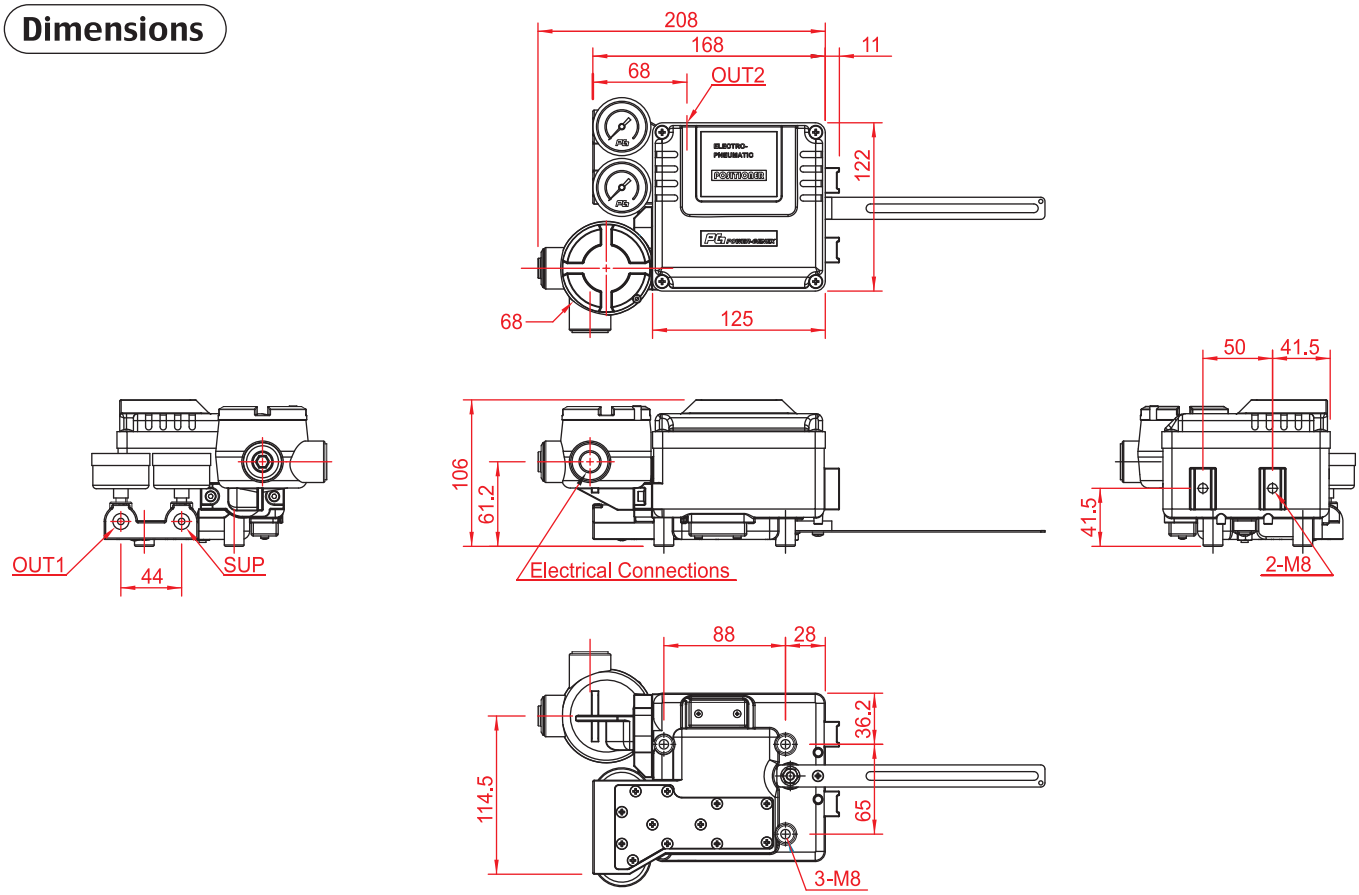

Robust valve control device giving a confidence in reliable performance and outstanding durability under harsh working environments

Features

- Easy maintenance
- Precise calibration with simple SPAN and ZERO adjustments
- Simple conversion to direct acting or reverse acting
- 1/2 split range available
- Rugged aluminum housing with corrosion-resistant coating
- Vibration resistant design
- Stainless steel gauges standard
- Restricted pilot valve orifice kit for small actuators included
- KC-certified flameproof Ex dmb IIB+H_2 T6
  - NEPSI-certified flameproof Ex dmb IIB+H_2 T6
  - IECEx / KC-certified flameproof Ex dmb IIC T6/T5
  - ATEX / TR-CU-certified flameproof Ex dmb IIC T6/T5
  - IECEx / KC-certified intrinsically safe Ex ia IIC T6
  - ATEX / TR-CU-certified flameproof Ex ia IIC T6

Options

- Position transmitter (4...20 mA output signal)
- 2 x SPDT limit switch
- 2 x P&F proximity sensor NJ2-V3-N
- Visual dome indicator
  - High temperature (+120℃)
  - Low temperature (-40℃)

Specifications

	EPR	
	Rotary Type (Cam Feedback)	
	Single	Double
Input Signal	4~20 mA DC (Note. 1)	
Input Resistance	235±15Ω	
Air Supply	Max. 7.0 bar (100 psi) free of oil, water, and moisture	
Operating Angle	60~100° (Note. 2)	
Pneumatic Connections	PT(Rc) 1/4 or NPT 1/4	
Electrical Connections	PF(G) 1/2 or NPT 1/2	
Protection Class	Ex dmb IIB+H_2 T6 / Ex dmb IIC T6/T5 Ex ia IIC T6 / IP66	
Ambient Temperature	-20 ~ +70℃ (Note. 3)	
Pressure Gauge	Stainless steel	
Output Characteristics	Linear	
Linearity	Within ±1.0 % F.S	Within ±1.5 % F.S
Sensitivity	Within ±0.5 % F.S	
Hysteresis	Within 1.0 % F.S	
Repeatability	Within ±0.5 % F.S	
Air Consumption	5 LPM (Sup. 1.4 kgf/㎠)	
Flow Capacity	80 LPM (Sup. 1.4 kgf/㎠)	
Material	Aluminum die-cast	
Weight	3.5 kg (with terminal box) 3.2 kg (without terminal box)	

With Dome Indicator

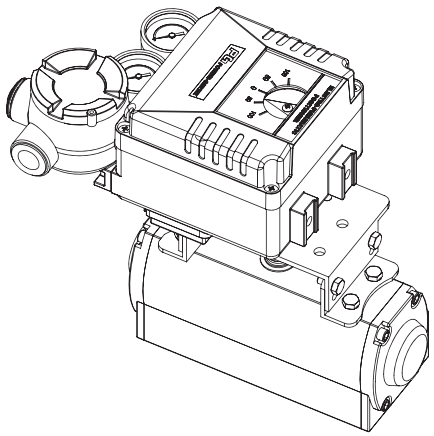

Note : 1) 1/2 spilt range is available for 4~12mA input signal or 12~20mA input signal
2) Operating angle can be adjusted to 0~60° or 0~100°
3) Temperature option : up to +120℃ without feedback options
up to +85℃ with feedback options
up to -40℃ without feedback options

Mounting

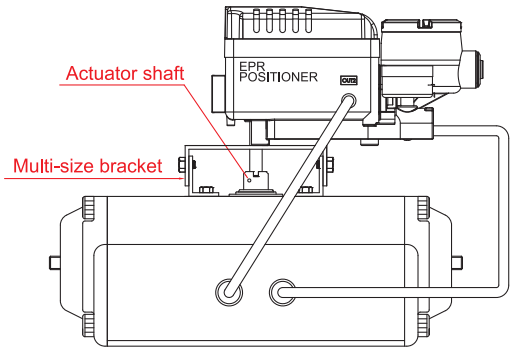

NAMUR Type Mounting

Note that feedback lever shaft "A" should be placed in the orifice of fork lever "B" and they should be in perfect alignment with a rotary actuator output shaft

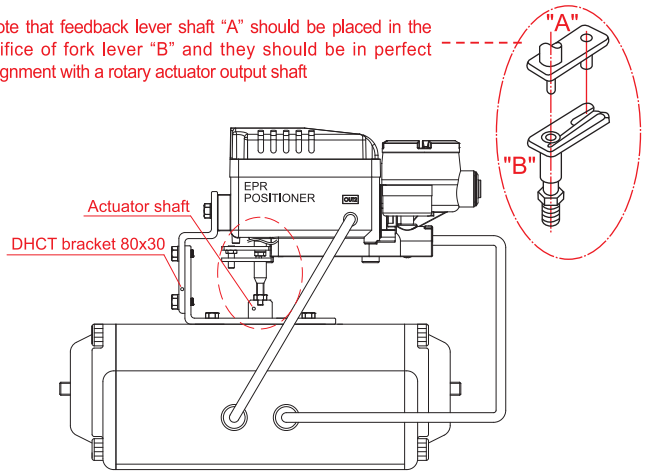

Fork Lever Type Mounting

Internal View

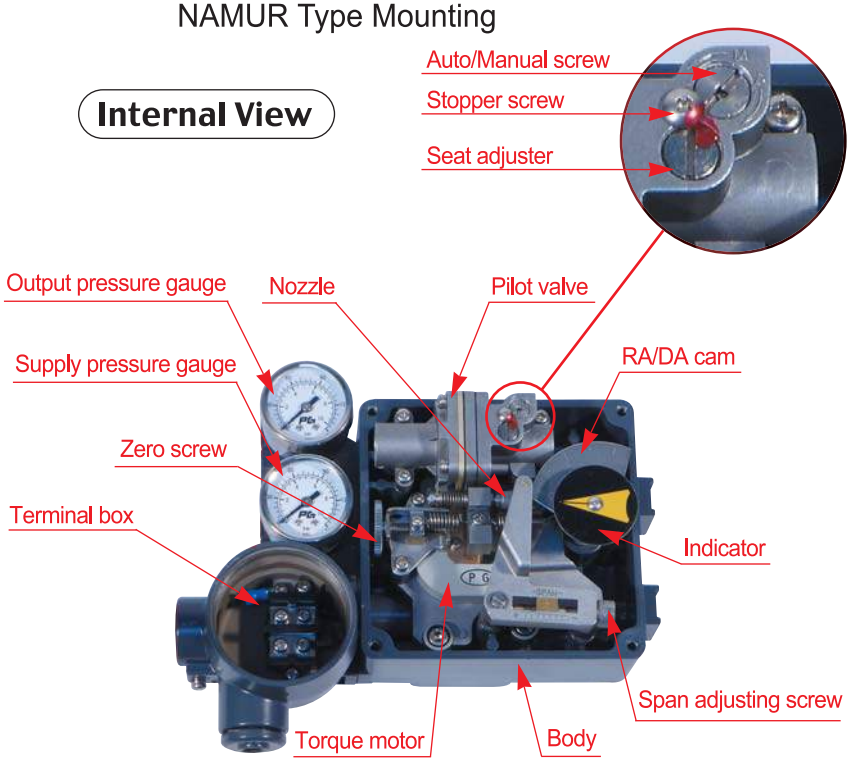

Multi-size Bracket

TYPE	H
80 x 30 x 20H	41
80 x 30 x 30H	51
130 x 30 x 20H	41
130 x 30 x 30H	51
130 x 30 x 50H	71

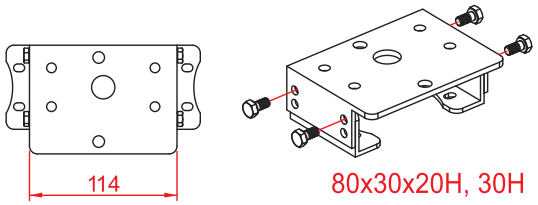

80x30x20H, 30H

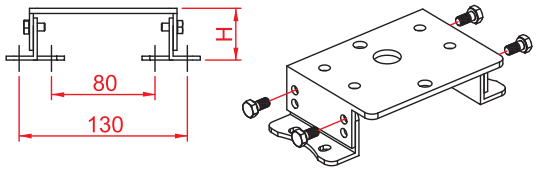

80x30x20H, 30H, 50H

Air Connections

Direct Acting (DA)	
As the input signal increases, Actuator stem rotates clockwise.	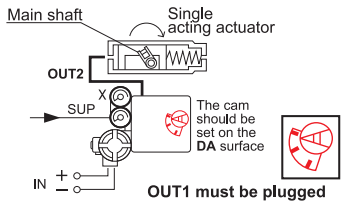
As the input signal increases, Actuator stem rotates clockwise.	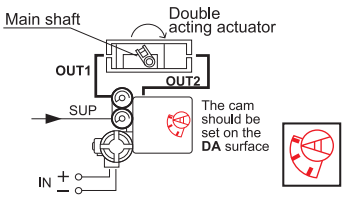

Reverse Acting (RA)	
As the input signal increases, Actuator stem rotates counter clockwise.	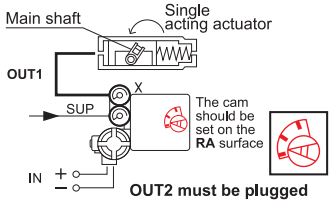
As the input signal increases, Actuator stem rotates counter clockwise.	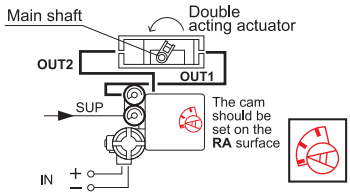

Position Transmitter Options (Built-in Type)

1. Board View

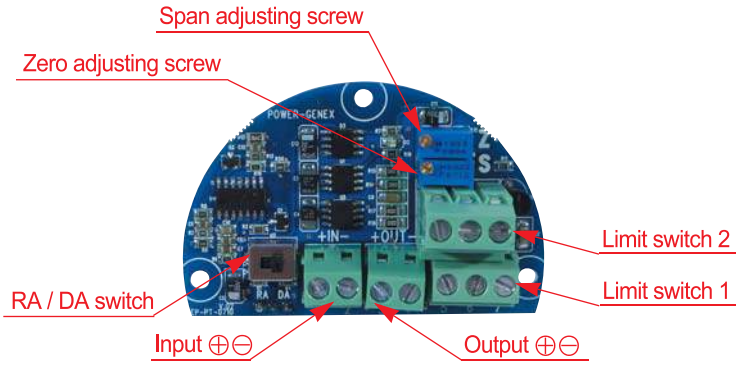

< Analog Position Transmitter & Limit Switches >

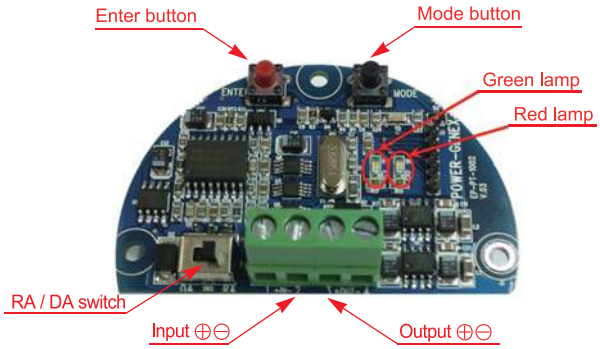

< Smart Position Transmitter >
(Zero / Span Auto Setting)

2. Position Transmitter (4-20mA output signal)

a. Specifications

Power Supply Rating	5.5 - 30 VDC loop power
Recommended Power Supply	24 VDC
Output Signal	4 - 20 mA, 2-wire
Operating Temperature	-20℃ ~ +85℃
Load Impedance	0 ~ 600 ohms
Max. Output	30 mA DC
Linearity	±1.0 %
Hysteresis	1.0 % of full scale
Repeatability	±0.5 % of full scale
Adjustment	Zero and Span in terminal box

b. with mA calibrator

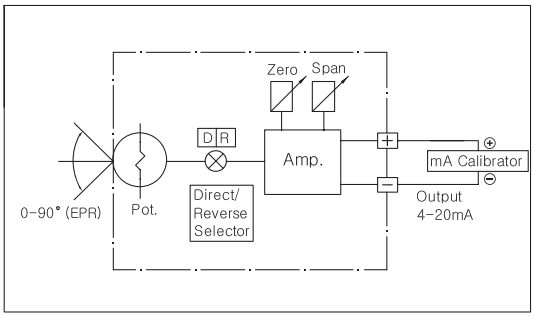

c. with multimeter

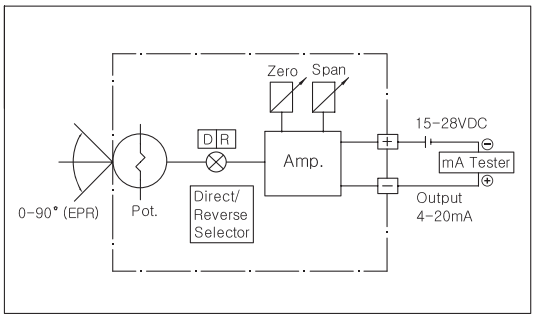

3. Wiring Diagram

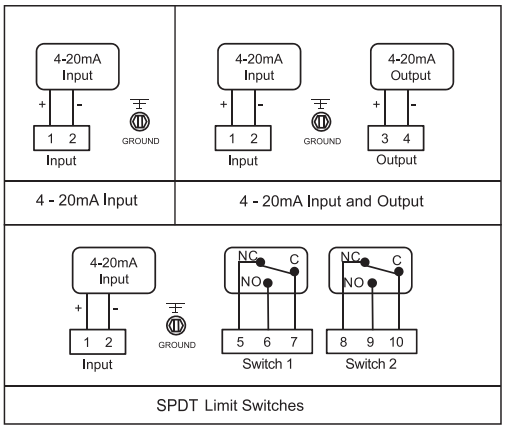

4. SPDT Limit Switches

a. Specifications

Contacts	SPDT Form C
AC Rating	16 A 1/2 HP 125/250 VAC
DC Rating	0.6 A 125 VDC / 0.3 A 250 VDC
Adjustment	Cams with set screws (L-wrench included for setting)

b. Wiring and Application

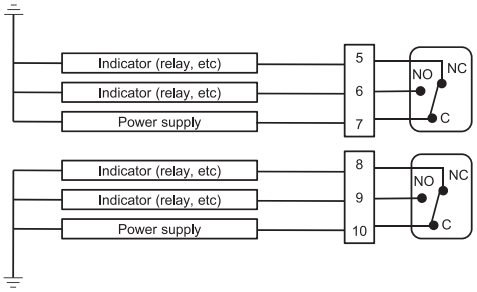

How to Order

EPR–	Protection Class	Feedback Shaft	Pressure Gauge (SUP. OUT)	Pilot Valve Orifice	Position Feedback	Connection Threads	Dome Indicator	Operating Temp.	Mounting Bracket

Description	Code
Protection Class :	F : KC / NEPSI flameproof Ex dmb IIB+H_2 T6 A : KC flameproof Ex dmb IIC T6/T5 D : IECEx / ATEX / TR-CU flameproof Ex dmb IIC T6/T5 I : IECEx / ATEX / TR-CU / KC intrinsically safe Ex ia IIC T6 W : Weatherproof to IP66
Feedback Shaft :	N : NAMUR shaft (direct mounting) A : Fork lever M6 x 40L B : Fork lever other size on request
Presure Gauge :	1 : 6 bar (90 psi) 2 : 10 bar (150 psi)
Pilot Valve Orifice :	S : Standard(Actuator volume over 180㎤) M : Small orifice (Φ1.0 or Φ0.7) (Actuator volume over 90 ~180㎤)
Position Feedback : (only for weatherproof type)	N : None (standard) O : Analog position transmitter (4 ~ 20mA output signal) S : Smart position transmitter (4 ~ 20mA output signal) L : 2 x SPDT limit switch P : 2 x proximity sensor P&F NJ2-V3-N M : O + L Q : O + P

Description	Code
Connection Threads : (pneumatic - electrical)	3 : PT(Rc) 1/4 - PF(G) 1/2 (standard) 4 : NPT 1/4 - NPT 1/2 5 : PT(Rc) 1/4 - M20 x 1.5
Dome Indicator :	N : Flat indicator (standard) D : Dome indicator
Operating Temperature : (only for weatherproof type)	T : 70℃(standard) H : 120℃(without position feedback option) 85℃(with position feedback option) L : - 40℃(without position feedback option)
Mounting Bracket : - NAMUR Shaft type : - Fork Lever type :	N : None R : Multi-size NAMUR bracket for IEC 60534-6-2 / VDI/VDE 3845 (130x30x50 bracket on request) F : PG bracket 80x30 for fork lever type E : Multi-size NAMUR bracket for fork lever type (130x30x50 bracket on request)

Dimensions

A. With Flat Indicator

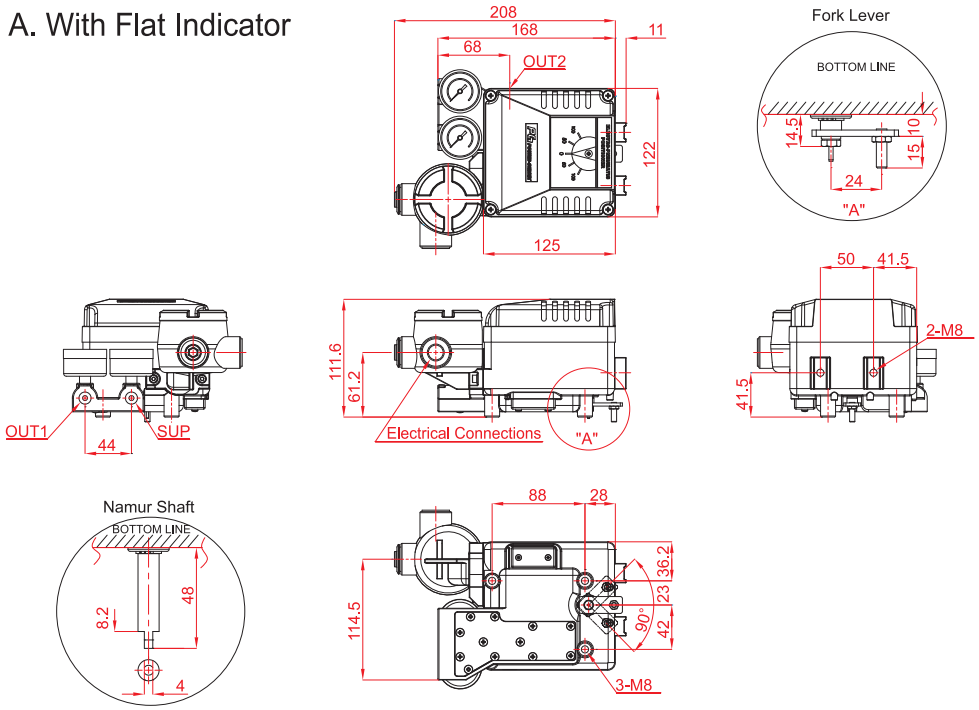

B. With Dome Indicator

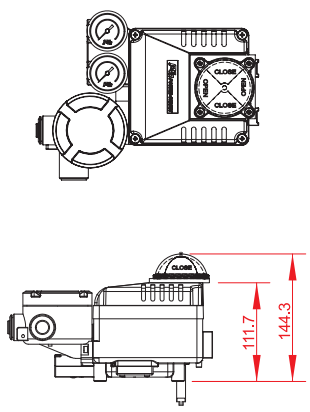

Robust valve control device giving a confidence in reliable performance and outstanding durability under harsh working environments

Features

- Easy maintenance
- Precise calibration with simple SPAN and ZERO adjustments
- Simple conversion to direct acting or reverse acting
- 1/2 split range available
- Rugged aluminum housing with corrosion-resistant coating
- Vibration resistant design
- Stainless steel gauges standard
- Restricted pilot valve orifice kit for small actuators included

Options

- High temperature

Specifications

	PPL	
	Linear Type (Lever Feedback)	
	Single	Double
Input Signal	0.2 - 1.0 bar (3 - 15 psi) (Note.1, 2)	
Supply Air Pressure	Max. 7.0 bar (100 psi)	
Standard Stroke	10 - 80 mm (Note.3)	
Pneumatic Connections	PT(Rc) 1/4 or NPT 1/4	
Ambient Temperature	-20 ~ +70℃ (Note. 4)	
Pressure Gauge	Stainless steel	
Output Characteristics	Linear	
Linearity	Within ± 1.0 % F.S	Within ± 1.5 % F.S
Sensitivity	Within ± 0.2 % F.S	Within ± 0.5 % F.S
Hysteresis	Within 1.0 % F.S	
Repeatability	Within ± 0.5 % F.S	
Air Consumption	5 LPM (Sup. 1.4 bar)	
Flow Capacity	80 LPM (Sup. 1.4 bar)	
Body Material	Aluminium die-cast	
Weight	2.1 kg	

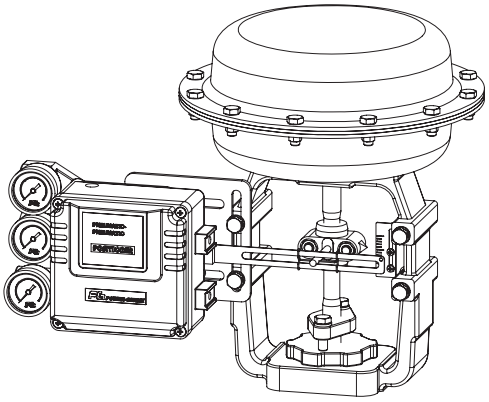

Note : 1) 1/2 spilt range is available for 3~9 psi input signal or 9~15 psi input signal
2) Please contact for 6~30 psi input signal
3) Feedback lever can be extended to stroke 80 ~ 150mm
4) High temperature option : up to +120℃

How to Order

PPL — Feedback Lever | Pressure Gauge | Pilot Valve Orifice | Connection Threads | Operating Temperature | Mounting Bracket

Description	Code
Feedback Lever :	A : Stroke 10 ~ 40mm B : Stroke 10 ~ 80mm C : Stroke 80 ~ 150mm
Pressure Gauge :	1 : 6 bar (90psi) 2 : 10 bar (150psi)
Pilot Valve Orifice :	S : Standard (Actuator volume over 180㎤) M : Small orifice (Φ1.0 or Φ0.7) (Actuator volume 90 ~ 180㎤)

Description	Code
Connection Threads : (pneumatic)	3 : PT(Rc) 1/4 4 : NPT 1/4
Operating Temperature :	T : 70℃ (standard) H : 120℃ L : - 40℃
Mounting Bracket	N : None L : DIN / IEC 60534-6-1

Dimensions

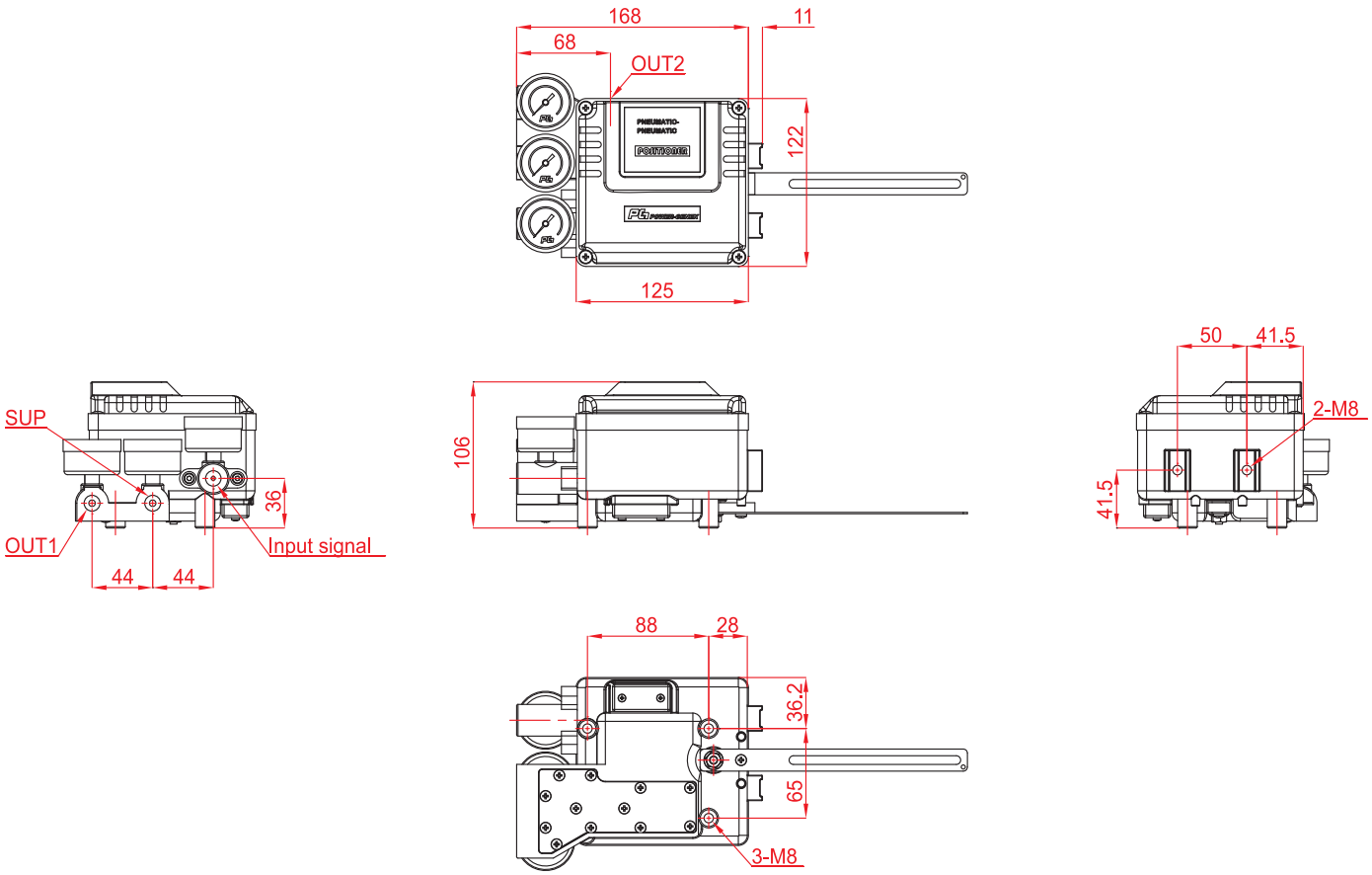

Robust valve control device giving a confidence in reliable performance and outstanding durability under harsh working environments

Features

- Easy maintenance
- Precise calibration with simple SPAN and ZERO adjustments
- Simple conversion to direct acting or reverse acting
- 1/2 split range available
- Rugged aluminum housing with corrosion-resistant coating
- Vibration resistant design
- Stainless steel gauges standard
- Restricted pilot valve orifice kit for small actuators included

Options

- Position transmitter (4-20mA output signal)
- 2 x SPDT limit switch
- 2 x P&F proximity sensor NJ2-V3-N
- Visual dome indicator
- High temperature

Specifications

	PPR	
	Rotary Type (Cam Feedback)	
	Single	Double
Input Signal	0.2 - 1.0 bar (3 - 15 psi) (Note.1, 2)	
Supply Air Pressure	Max. 7.0 bar (100 psi)	
Standard Stroke	60 - 100° (Note.3)	
Pneumatic Connections	PT(Rc) 1/4 or NPT 1/4	
Ambient Temperature	-20 ~ +70℃ (Note. 4)	
Pressure Gauge	Stainless steel	
Output Characteristics	Linear	
Linearity	Within ± 1.0 % F.S	Within ± 1.5 % F.S
Sensitivity	Within ± 0.5 % F.S	
Hysteresis	Within 1.0 % F.S	
Repeatability	Within ± 0.5 % F.S	
Air Consumption	5 LPM (Sup. 1.4 bar)	
Flow Capacity	80 LPM (Sup. 1.4 bar)	
Body Material	Aluminium die-cast	
Weight	2.5 kg	

With Dome Indicator

Note : 1) 1/2 spilt range is available for 3~9 psi input signal or 9~15 psi input signal
2) Please contact for 6~30 psi input signal
3) Operating angle can be adjusted to 0~60° or 0~100°
4) High temperature option : up to +120℃ without feedback options
up to +85℃ with feedback options

How to Order

PPR –	Feedback Lever	Pressure Gauge	Pilot Valve Orifice	Position Feedback	Connection Threads	Dome Indicator	Operating Temperature	Mounting Bracket

Description	Code
Feedback Shaft :	N : NAMUR shaft (direct mounting) A : Fork lever M6 x 40L B : Fork lever other size on request
Pressure Gauge :	1 : 6 bar (90psi) 2 : 10 bar (150psi)
Pilot Valve Orifice :	S : Standard (Actuator volume over 180㎤) M: Small orifice (Φ1.0 or Φ0.7) (Actuator volume 90 ~ 180㎤)
Position Feedback :	N : None (standard) O : Position transmitter (4 ~ 20mA output signal) L : 2 x SPDT limit switch P : 2 x proximity sensor P&F NJ2-V3-N M: O + L Q : O + P

Description	Code
Connection Threads : (pneumatic)	3 : PT(Rc) 1/4 4 : NPT 1/4
Dome Indicaotr :	N : Flat indicator (standard) D : Dome indicator
Operating Temperature :	T : 70℃ (standard) H : 120℃ (without position feedback option) 85℃ (with position feedback option) L : - 40℃ (without position feedback option)
Mounting Bracket **- NAMUR Shaft Type :**	N : None R : Multi-size NAMUR bracket for DIN VDI/VDE 3845 (130 x 30 x 50 bracket on request)
- Fork Lever Type	F : DHCT bracket 80x30 for fork lever type E : Multi-size NAMUR bracket for Fork lever type (130 x 30 x 50 bracket on request)

Dimensions

A. With Flat Indicator

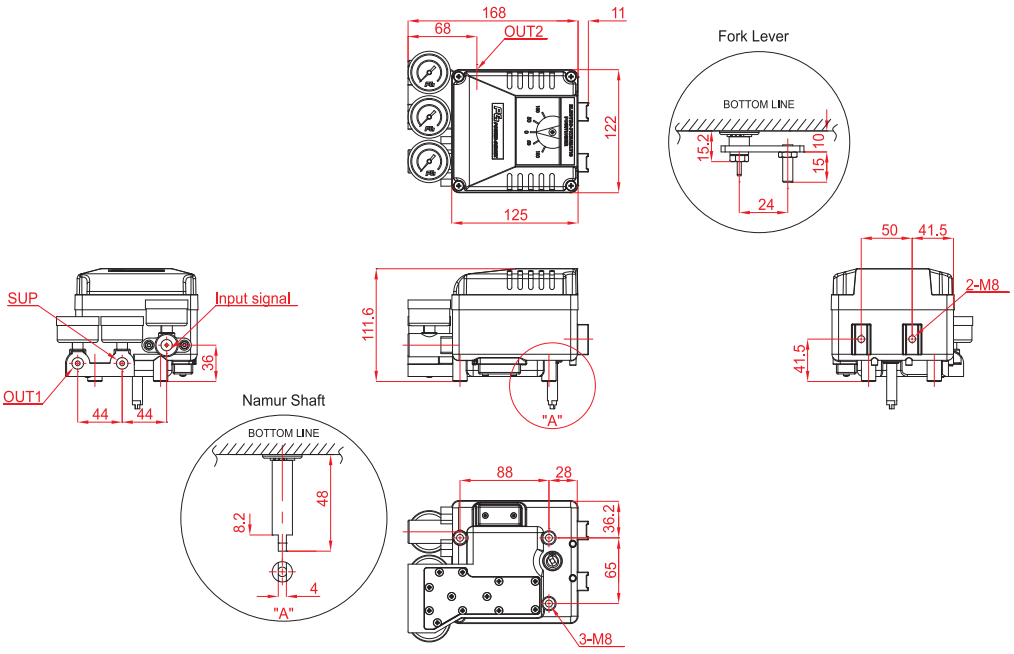

B. With Dome Indicator

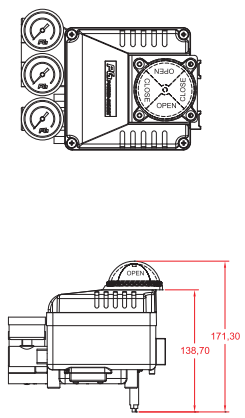

Cylinder positioner ideally designed and optimized for cylinder actuator and guaranteeing precise and stable performance with cylinder actuator

Features

- Easy to set
- Compact
- Precise and stable performance
- Suitable for a wide application

Specifications

	PPCL
Input Signal	3 ~ 15 psi (0.2 ~ 1 bar)
Air Supply	3 ~ 7 bar (100 psi) free of oil, water, and moisture
Standard Stroke	30 ~ 300mm
Pneumatic Connections	PT(Rc) 1/4 or NPT 1/4
Protection Class	IP55
Ambient Temperature	-20 ~ +70℃ *
Output Characteristics	Linear
Linearity	Within ± 1.0% F.S
Sensitivity	Within ± 0.5% F.S
Hysteresis	Within 1.0% F.S
Repeatability	Within ± 0.5% F.S
Air Consumption	5 LPM (Sup. 1.4 bar)
Material	Aluminum die-cast
Weight	1.5 kg

* High temperature option : up to +120℃

How to Order

PPCL — Stroke | Connections (Pneumatic) | Operating Temperature

Description	Code
Stroke :	On request (30mm ~ 300mm)
Connections : (Pneumatic - electrical)	P: PT(Rc) 1/4 - PF(G) 1/2 N: NPT 1/4 - NPT 1/2
Operating Temperature :	N: -20 ~ +70℃ (standard) H: -20 ~ +120℃ (high temp.)

NOTE

Please be sure to describe a size and a stroke of the cylinder actuator required when placing an order

CAUTION

1. Please be sure to disconnect supply air completely before opening a feedback spring protection tube.
2. When input signal increases, the PPCL can operate only in the diection that the cylinder extends.

Dimensions

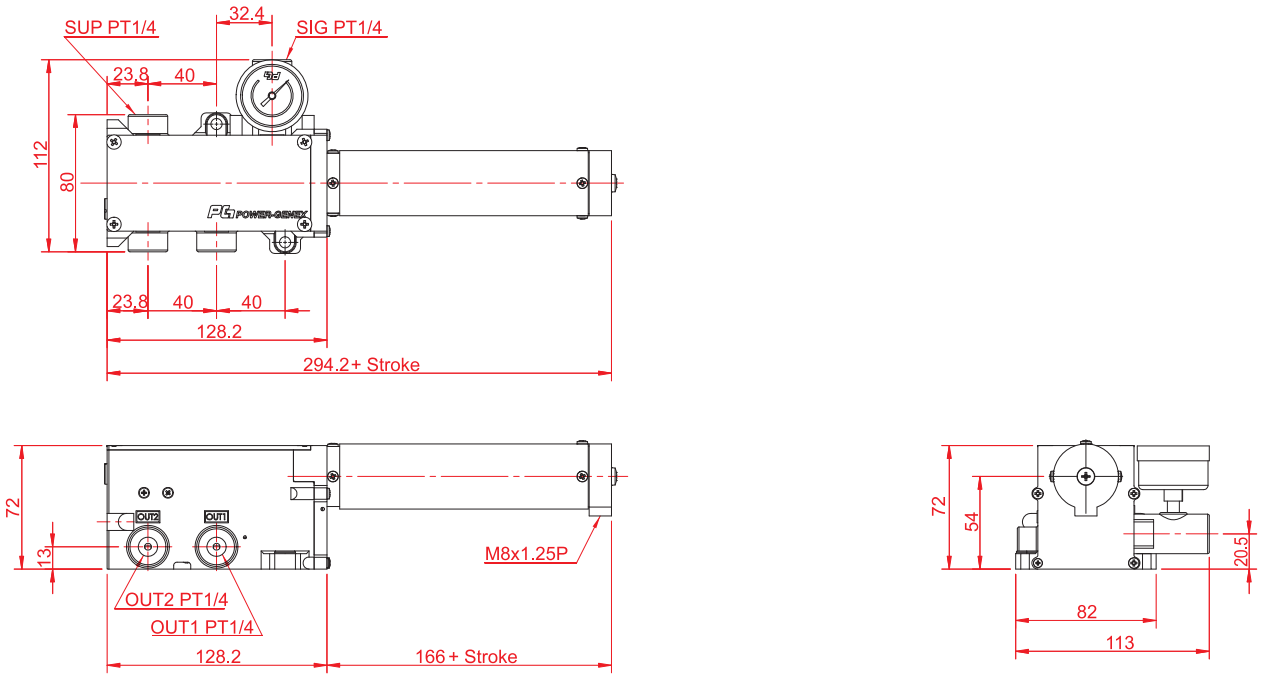
SUP PT1/4
32.4
SIG PT1/4
23.8
40
112
80
23.8
40
40
128.2
294.2+ Stroke
72
13
OUT2
OUT1
M8x1.25P
OUT2 PT1/4
OUT1 PT1/4
128.2
166 + Stroke
72
54
20.5
82
113

Dynamic valve drive to convert 4-20mA current signal to pneumatic output pressure with state-of-the art piezoelectric technology

Features

- Rugged aluminum die-cast housing
- Precise control performance and high dynamic response
- Simple and easy to set
- Low air consumption due to piezo electric microvalve

Specifications

Model	IPC
Input Signal	4 - 20 mA @ 24 VDC, 2-wire
Output Pressure	Max. 3 bar (45 psi)
Air Supply Pressure	1.4 - 4 bar (20 - 60 psi)
Air Consumption	1.3 ℓ/min = 0.08 N㎥/h = 0.05 scfm
Output Characteristic	Linear to input signal
Action	Direct
Total Error	Max. error ±0.3% of span (linearity + hysteresis + repeatability)
Supply Air	Filtered compressed, dry and non-oiled air (up to 5 micron)
Operating Temperature	-20℃ - +70℃
Protection Class	IP55
Impedance	425 Ω @ 20 mA
Mounting Type	Rail (to DIN EN 50022)
Pneumatic Connection	PT(Rc) 1/8
Electrical Connections	PG 9
Body Material	Aluminum die-cast
Weight	820 g

How to Order

Output Pressure	Required Supply Air	Part Number
0 - 1 bar (0 - 15 psi)	1.5 bar (23 psi)	IPC - 01
0.2 - 1 bar (3 - 15 psi)	1.5 bar (23 psi)	IPC - 21
0.4 - 2 bar (6 - 30 psi)	2.5 bar (38 psi)	IPC - 42
0.2 - 3 bar (3 - 45 psi)	3.5 bar (53 psi)	IPC - 23
Other Pressure		On request

Applications

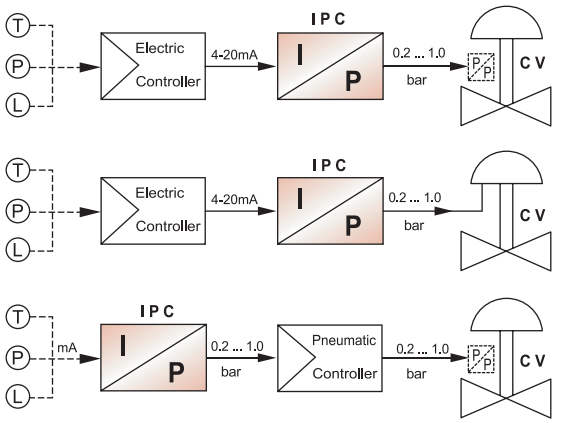

Ⓣ Temp. Transmitter Ⓟ Press. Transmitter Ⓛ Level Transmitter

IPC : I/P Converter, CV : Pneumatic Control Valve

Board view

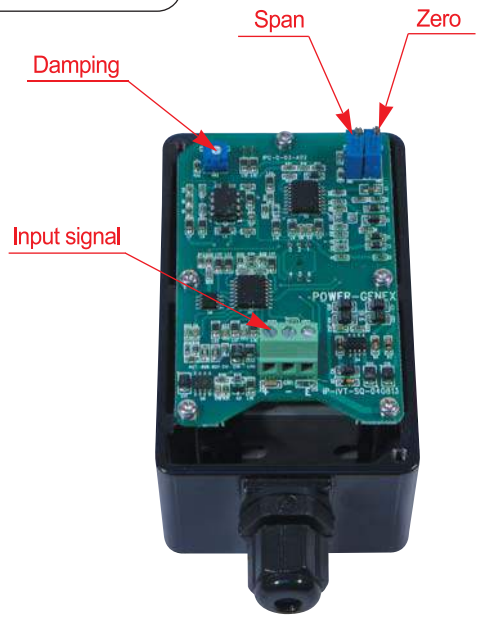

Dimensions

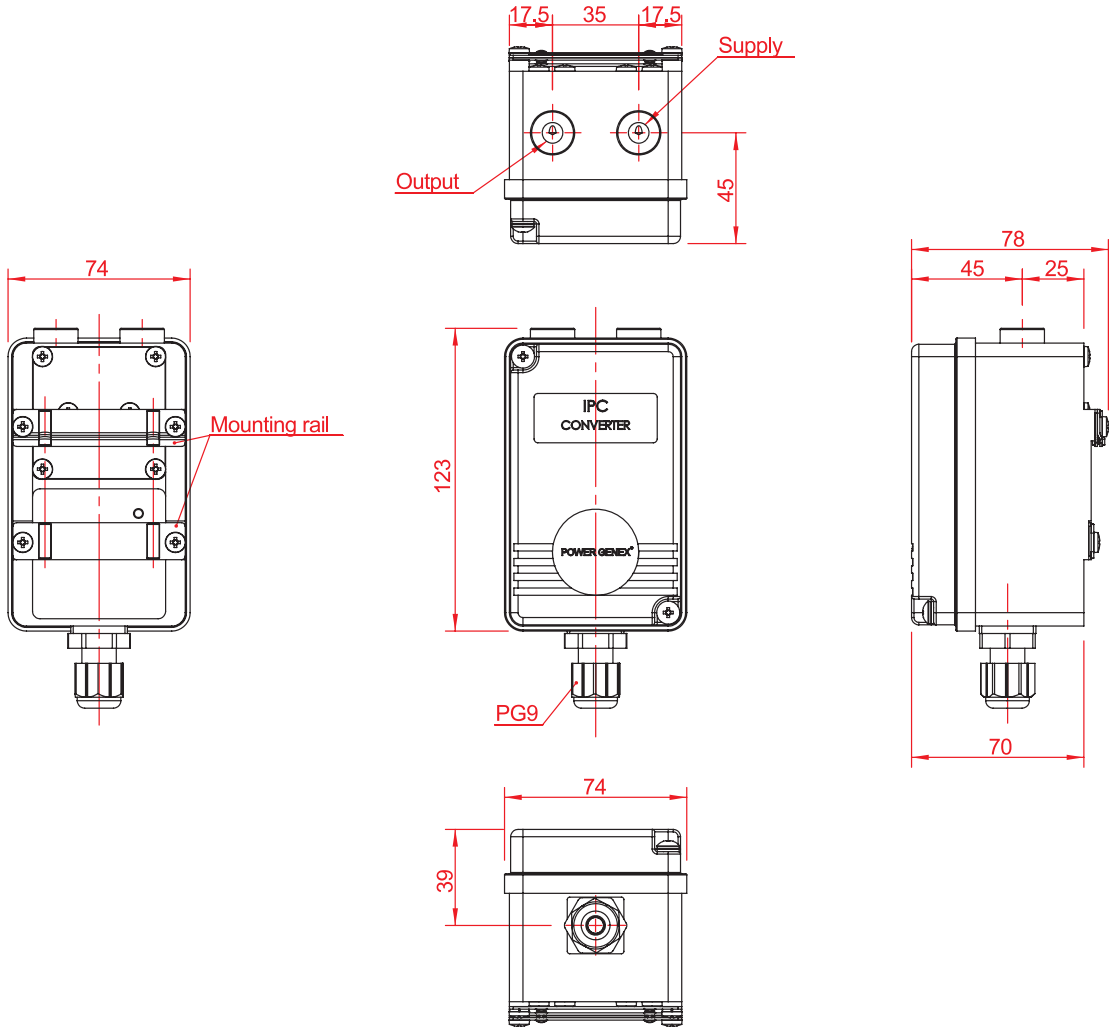

Explosion proof position transmitter for reliable valve position feedback with 4-20mA output signal

Features

- Rugged aluminum die-cast housing
- Optional 2 x SPDT limit switch or 2 x P&F proximity sensor NJ2-V3-N

Specifications

Model	PTP-L	PTP-R
Current Output Signal	4 - 20 mA, 2-wire	
Power Supply Range	12 - 30 VDC (24VDC recommendable)	
Span Adjustable Angle	10° - 45°	0° - 90°
Linearity	Within ± 1.0% F.S.	
Repeatability	Within ± 0.25% F.S.	
Hysteresis	Within 1.0% F.S.	
Operating Ambient Temperature	- 30℃ ~ +75℃	
Explosion Proof Class	Ex d IIC T6	
Protection Class	IP66	
Electrical Connections	PF(G) 1/2 or NPT 1/2	
Weight	0.9 kg	

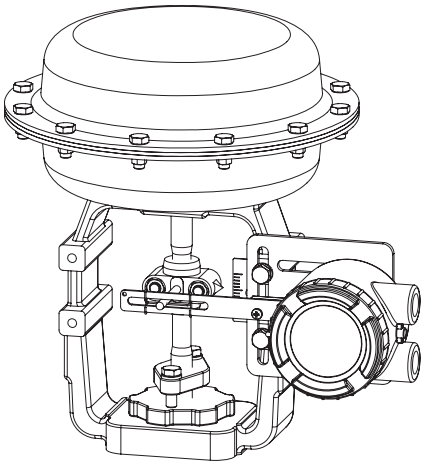

PTP-L Mounting to Globe Control Valve

How to Order

PTP — Operation — Limit Switches | Electrical Connections | Feedback Lever

Description	Code
Operation :	L : Linear type R : Rotary type
Limit Switches:	N : None S : 2 x SPDT mechanical limit switch P : 2 x P&F proximity sensor NJ2-V3-N
Electrical Connections:	1 : PF(G) 1/2 2 : NPT 1/2
Feedback Lever: (only for linear type)	A : Stroke 10 - 40mm B : Stroke 10 - 80mm C : Stroke 80 - 150mm

Ex) PTP-L-S1A (linear type, 2 x SPDT, G 1/2,10-40mm stroke)

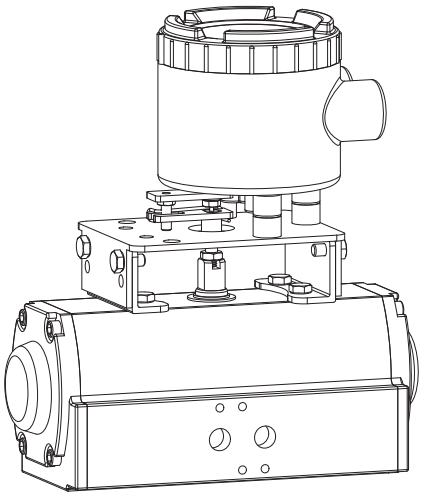

PTP-R Mounting to Pneumatic Rotary Actuator

Measuring 4–20mA Output Signal

1) with mA calibrator

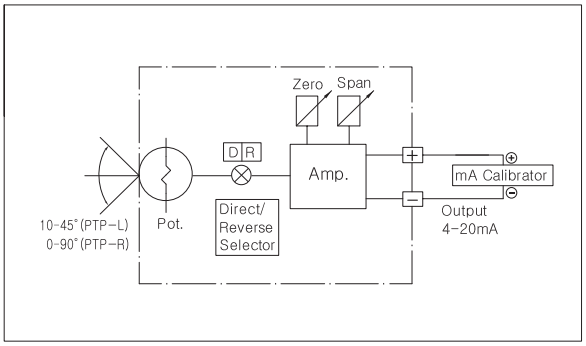

2) with multimeter

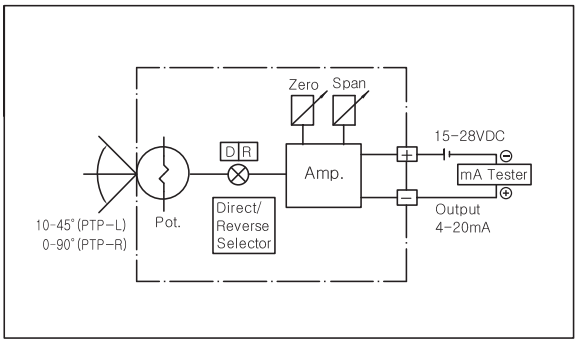

Dimensions

PTP-L (linear type)

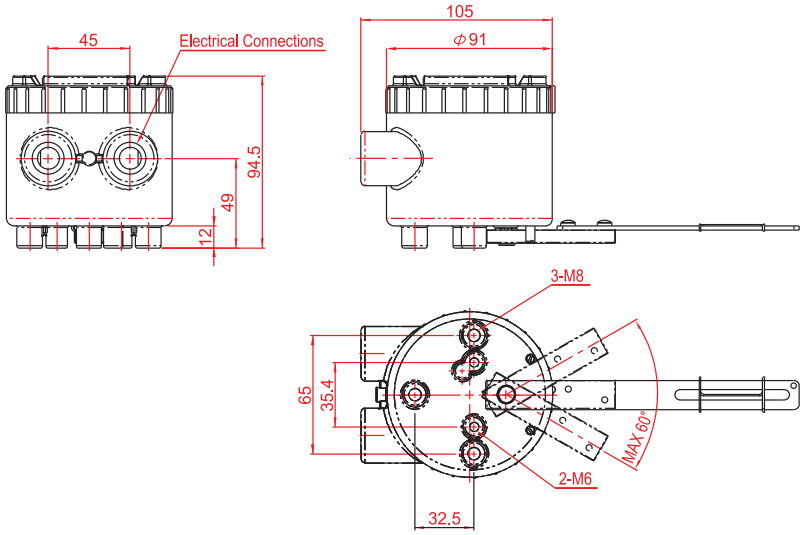

PTP-R (rotary type)

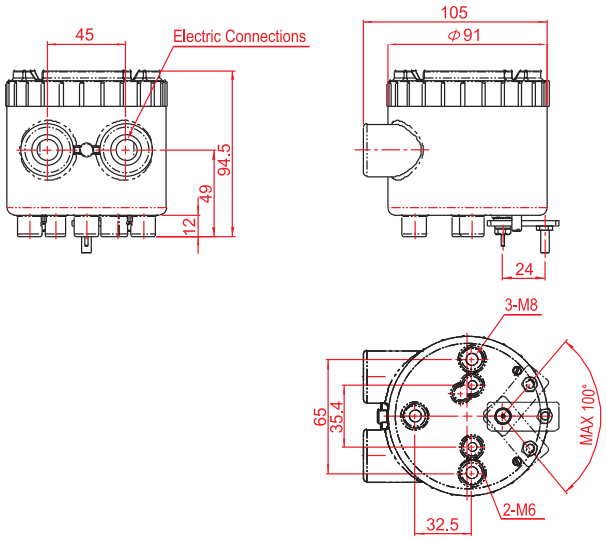

Lock-Up Valve

LU

Dependable safety valve to retain a set supply air pressure and guarantee a steady process control when a supply air is suddenly failed by accident and its pressure becomes lower than a set pressure

Specifications

	LU	
	LUS	LUD
Proof Pressure	Max 10 bar (150psi)	
Signal Pressure	1.4 ~ 7 bar	
Line Pressure	Max 7 bar (105psi)	
Flow Capacity (Cv)	0.9	
Operating Temperature	-20℃ ~ +70℃	
Pneumatic Connections	PT(Rc) 1/4 or NPT 1/4	
Hysterisis	Within 0.1 bar	
Body Material	Aluminum die-cast / 316SS	
Weight	0.6 kg	0.8 kg

How to Order

LU	Acting Type	—	Pneumatic Connections	Operating Temp.	Body Material

Description	Code
Acting Type :	S : Single acting D : Double acting
Pneumatic Connections :	1 : PT (Rc) 1/4 2 : NPT 1/4
Operating Temperature :	1 : -20 ~ +70℃ (standard) 2 : -20 ~ +120℃ (high temp.) 3 : -40 ~ +70℃ (low temp.)
Body Material :	1 : Aluminum die-cast 2 : Stainless steel 316

Dimensions

< LUS >

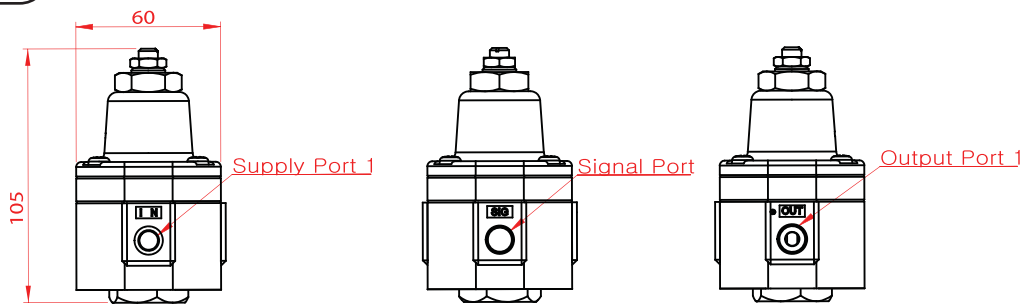

< LUD >

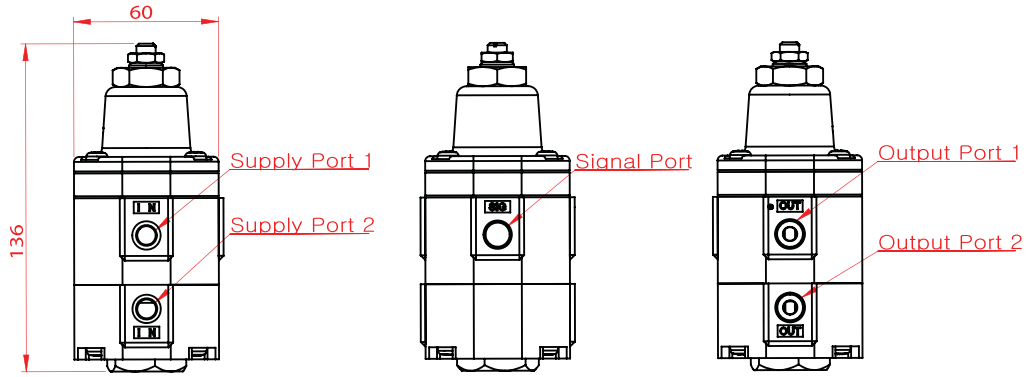

Snap Acting Relay

SAR

Snap Acting Relay is the device which is usually used with an air tank, converts an air flow direction and moves the valve to the fail-safe position when the signal air pressure is lower than the set air pressure. Also, it has a fail-freeze function to help the valve stay at the last position on the loss of a supply air pressure.

Specifications

	SAR	
	Single	Double
Proof Pressure	Max 10 bar (150psi)	
Signal Pressure	1.4 ~ 7 bar	
Line Pressure	Max 7 bar (105psi)	
Flow Capacity (Cv)	0.9	
Operating Temperature	-20℃ ~ +70℃ (STD)	
Pneumatic Connections	NPT 1/4	
Hysterisis	Within 0.1 bar	
Body Material	Aluminum / 316SS	
Weight (Aluminum / 316SS)	0.6 kg / 1.2 kg	0.8 kg / 2.5 kg

How to Order

SAR – | Material | Acting Type | Operating Temp. |

Description	Code
Material :	10 : Aluminum 11 : 316SS
Acting Type :	0 : Single acting 1 : Double acting
Operating Temperature :	0 : -20 ~ +70℃ (standard) 1 : -20 ~ +120℃ (high temp.) 2 : -40 ~ +70℃ (low temp.)

Dimensions

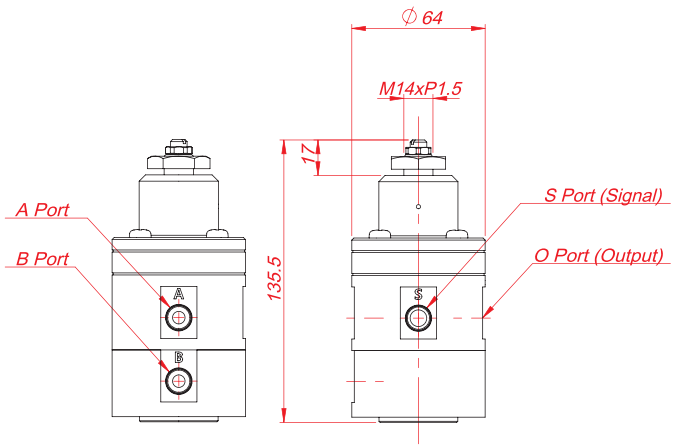

< SAR-Single >

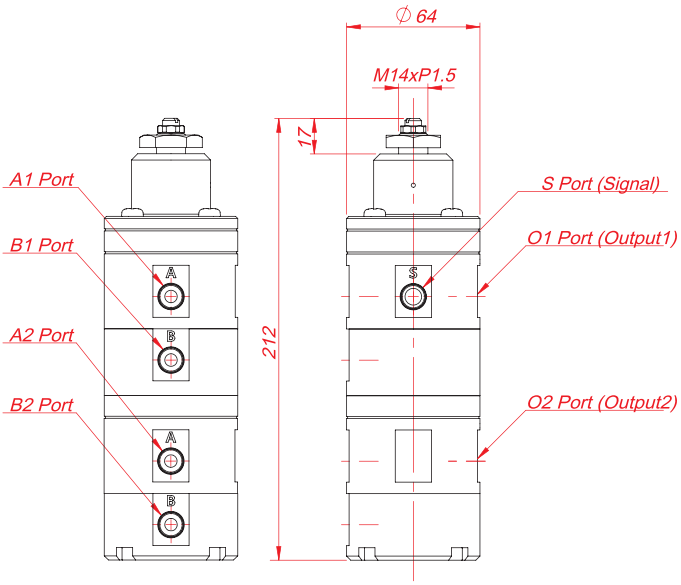

< SAR-Double >

Cylinder Applications

Consult with Power-Genex for the customized and optimized cylinder application

< With SS2 Positioner >

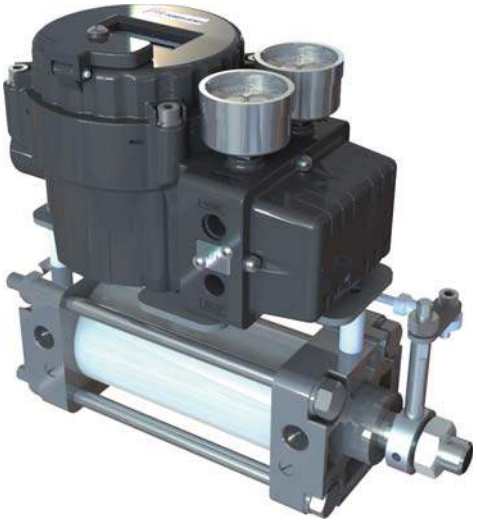

< With SS3 Positioner >

< With EPR Positioner >

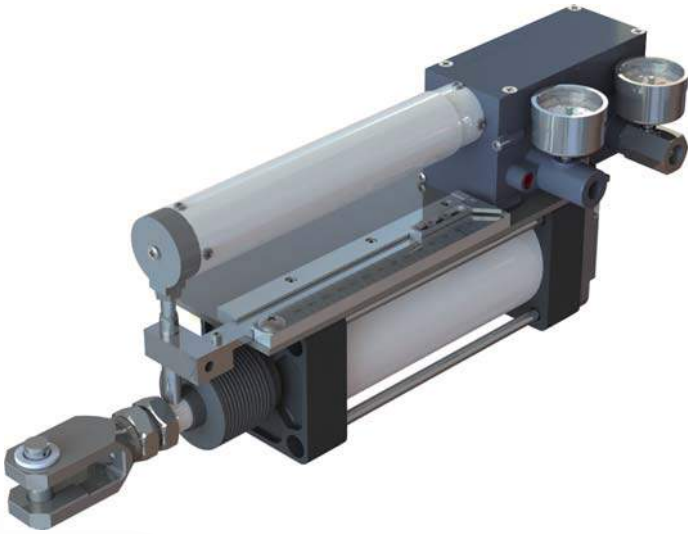

< With PPCL Positioner >

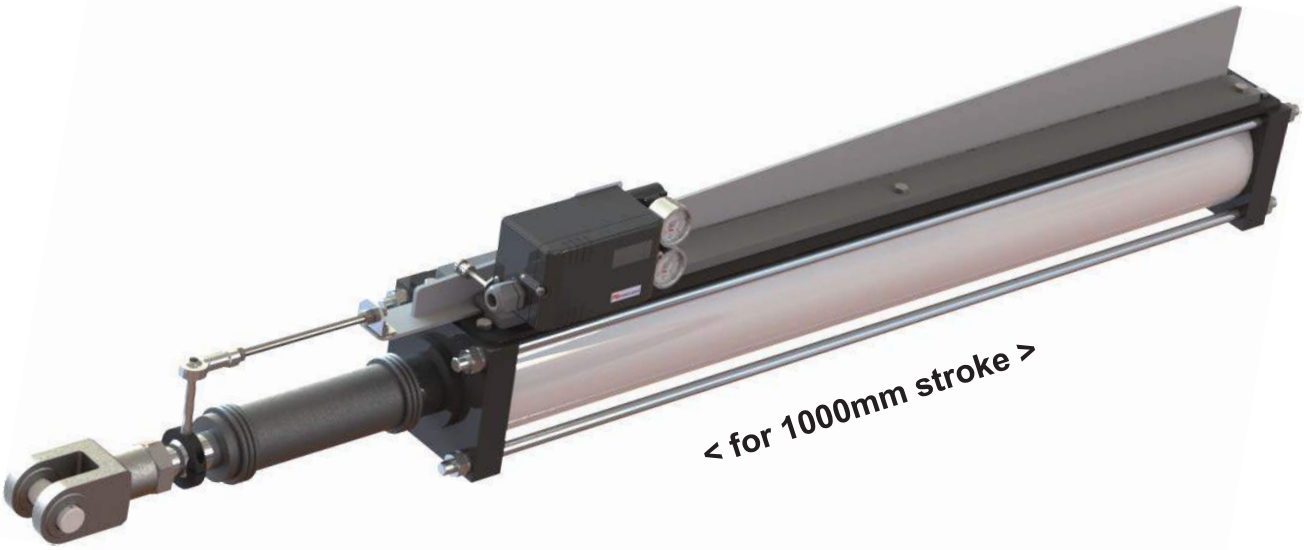

< for 1000mm stroke >

Installations of Valve Accessories

Linear Type

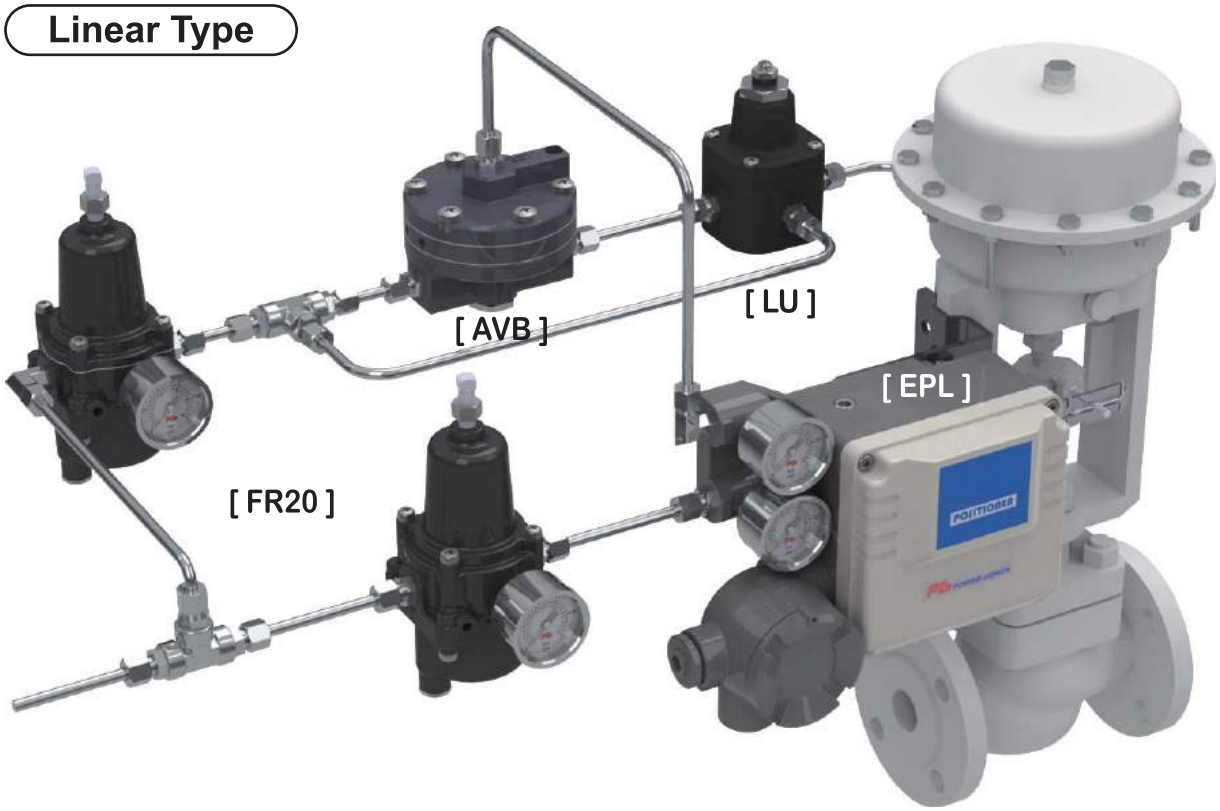

Rotary Type

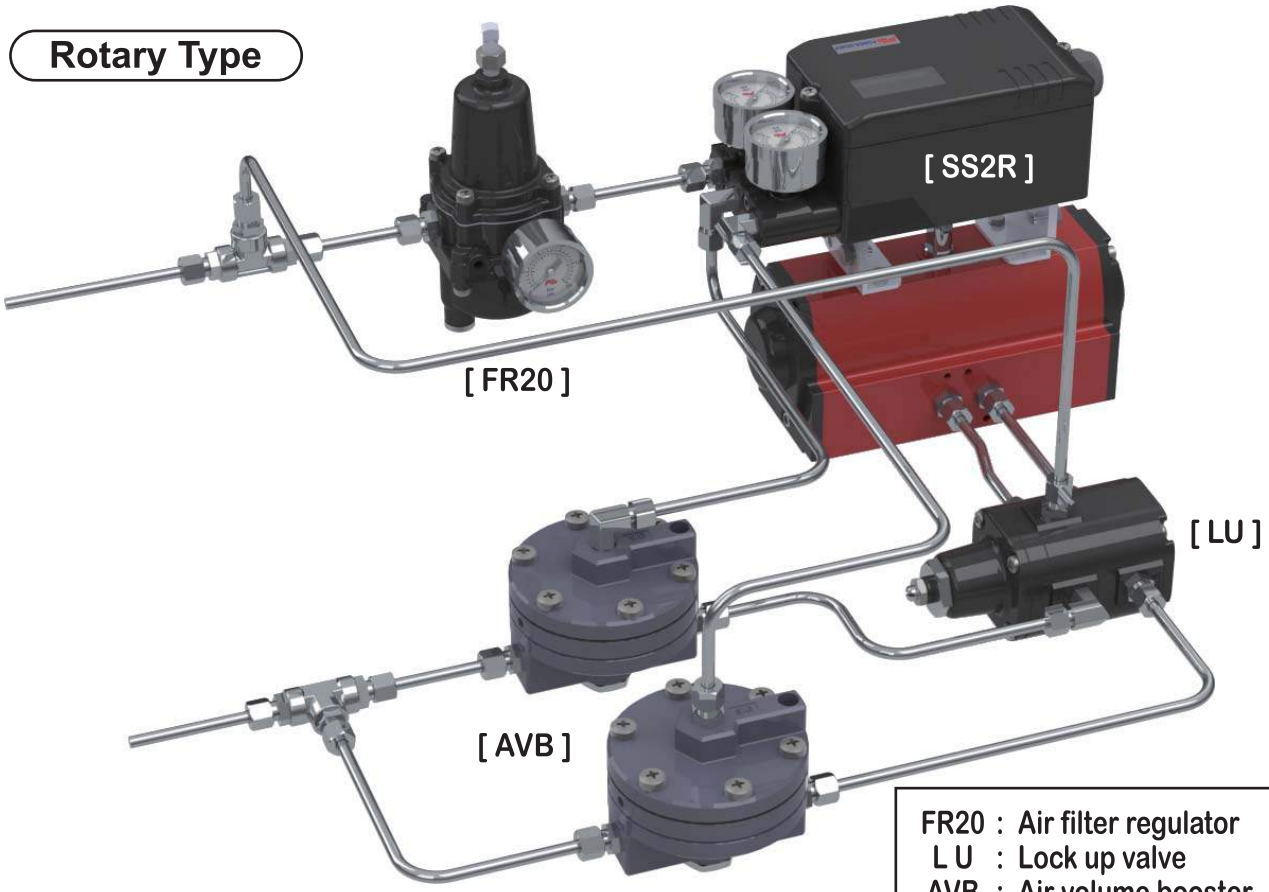

FR20	:	Air filter regulator
L U	:	Lock up valve
AVB	:	Air volume booster
E P	:	Electro-pneumatic positioner
SS2	:	Smart valve positioner

POWER-GENEX®

ESV Series

Solenoid Valve

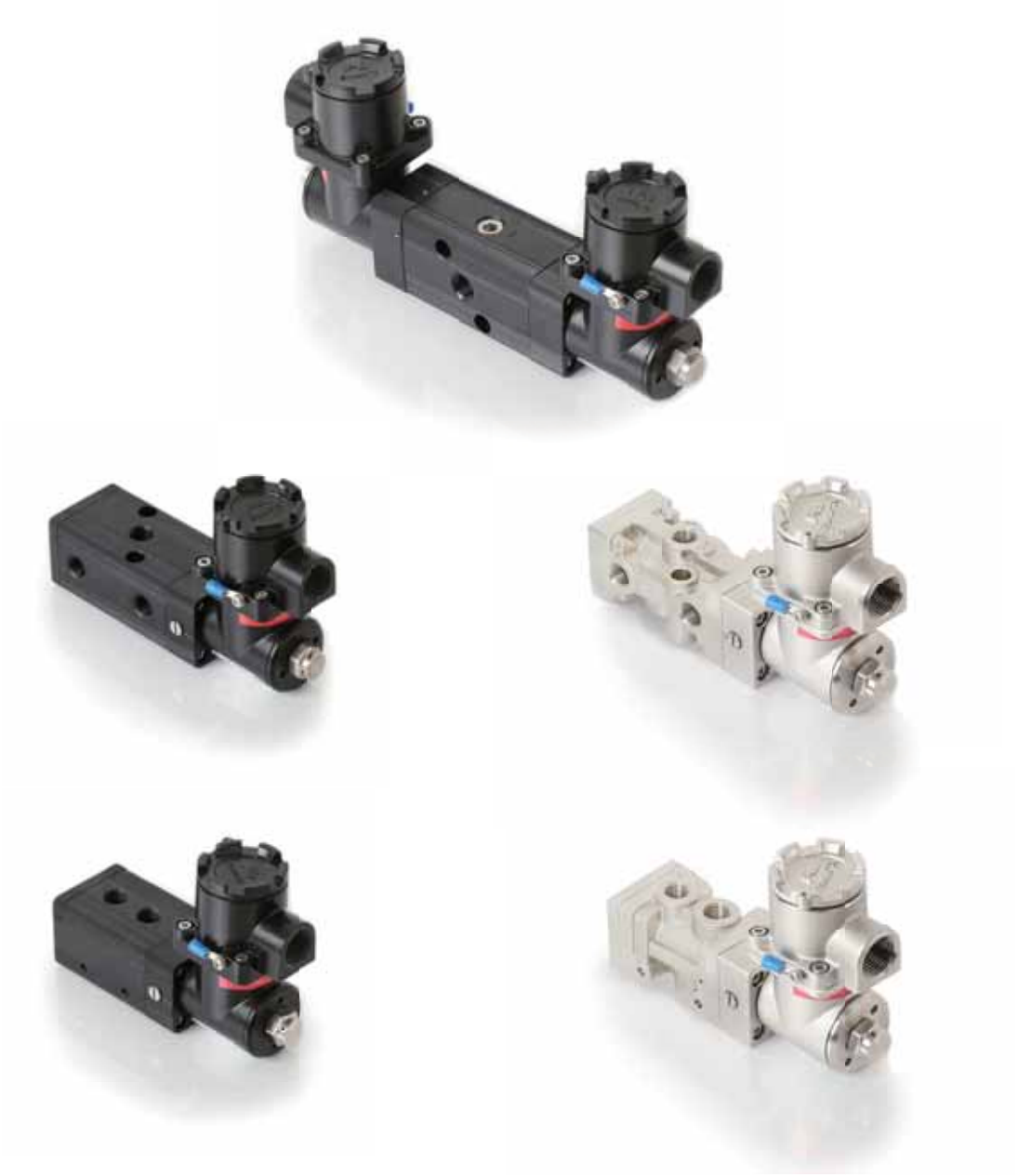

All innovation
on driving your valve automation

www.powergenex.com

Safety Integrity Level
SIL3
IEC 61508 / IEC 61511

Solenoid Valve
(5/2 way, Cv 0.9)

Explosion proof solenoid valve for a confident control under rough working environments

Features

- Rugged aluminum die-cast housing or Stainless steel 316
- Rotatable valve head for optimal mounting
- Direct NAMUR mounting or screw mounting
- Usable up to SIL3 acc. to IEC 61508
- Surge protection diedo
  - KCs - certified flameproof Ex d IIC , Ex tb IIC
  - CCC - certified flameproof Ex d IIC , Ex tb IIC
  - IECEx - certified flameproof Ex d IIC , Ex tb IIC
  - ATEX - certified flameproof Ex d IIC , Ex tb IIC
  - TRCU - certified flameproof Ex d IIC , Ex tb IIC

Specifications

Model	ESV-S	ESV-D
Operating Air Pressure	1.5 - 10 bar	
Air Supply (Max.)	15 bar	
Operating Voltage / Power	AC110V : 6.8W / AC220V : 6.4W / DC 24V : 3.4W	
Voltage Tolerance	10%	
Frequency	50Hz / 60Hz	
Explosion Proof Class	Ex d IIC T6 / T5 / T4, Ex tb IIIC T85 / T100 / T135, IP66	
Operating Ambient Temperature	T6 : -30 - +50 T5 : -30 - +65 , T4 : -30 - +80	
Flow Capacity(Cv)	0.9	
Mounting Configuration	NAMUR or screw interface	
Pneumatic Connections	PT(Rc) 1/4 or NPT 1/4	
Electrical Connection	PF(G) 1/2 , NPT 1/2 , M20 x 1.5	
Coil Insulation Grade	Class F / Class H	
Operating type	Single coil	Dual coil
Duty Cycle	100%	
Valve body material	Aluminum die-cast or Stainless steel 316	
Coil housing material	Aluminum die-cast or Stainless steel 316	
Weight (Valve body / Coil housing)	Aluminum / Aluminum : 0.9 kg Aluminum / SS316 : 1.9 kg SS316 / SS316 : 2.3 kg	Aluminum / Aluminum : 1.4 kg Aluminum / SS316 : 2.5 kg SS316 / SS316 : 3.3 kg

Rotatable Valve Head

The ESV valve head can be rotated by 90° to the right or to the left for an optimal mounting as shown below

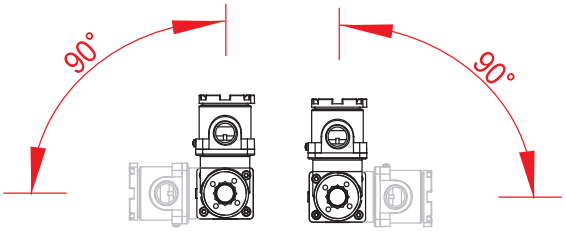

Mounting

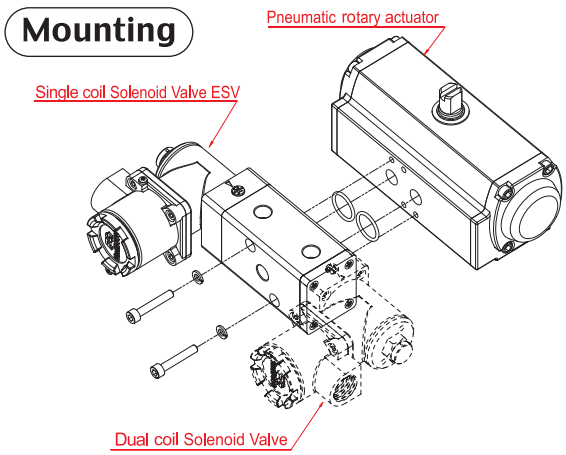

Solenoid Valve
(3/2 way, Cv 0.9)

Explosion proof solenoid valve for a confident control under rough working environments

Features

- Rugged aluminum die-cast housing or Stainless steel 316
- Rotatable valve head for optimal mounting
- Screw mounting
- Usable up to SIL3 acc. to IEC 61508
- Surge protection diedo

KCs - certified flameproof Ex d IIC , Ex tb IIC
CCC - certified flameproof Ex d IIC , Ex tb IIC
IECEx - certified flameproof Ex d IIC , Ex tb IIC
ATEX - certified flameproof Ex d IIC , Ex tb IIC
TRCU - certified flameproof Ex d IIC , Ex tb IIC

Specifications

Model	ESV-31	ESV-32
Operating Air Pressure	1.5 - 10 bar	
Air Supply (Max.)	15 bar	
Operating Voltage / Power	AC110V : 6.8W / AC220V : 6.4W / DC 24V : 3.4W	
Voltage Tolerance	10%	
Frequency	50Hz / 60Hz	
Explosion Proof Class	Ex d IIC T6 / T5 / T4 , Ex tb IIIC T85 / T100 / T135, IP66	
Operating Ambient Temperature	T6 : -30 - +50 T5 : -30 - +65 , T4 : -30 - +80	
Flow Capacity(Cv)	0.9	
Mounting Configuration	Screw interface	
Pneumatic Connections	PT(Rc) 1/4 or NPT 1/4	
Electrical Connection	PF(G) 1/2 , NPT 1/2 , M20 x 1.5	
Coil Insulation Grade	Class F / Class H	
Operating type	Nomally - Closed	Nomally - Open
Duty Cycle	100%	
Valve body material	Aluminum die-cast or Stainless steel 316	
Coil housing material	Aluminum die-cast or Stainless steel 316	
Weight (Valve body / Coil housing)	Aluminum / Aluminum : 0.8 kg Aluminum / SS316 : 1.8 kg SS316 / SS316 : 2.1 kg	

Rotatable Valve Head

The ESV valve head can be rotated by 90° to the right or to the left for an optimal mounting as shown below

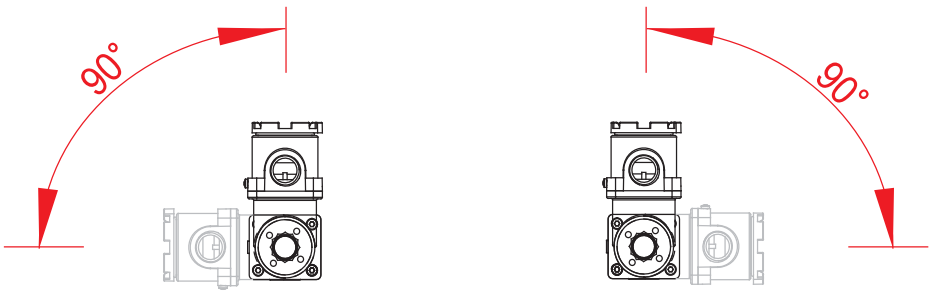

Explosion proof solenoid valve for a confident control under rough working environments

Features

- Rugged aluminum die-cast housing or Stainless steel 316
- Rotatable valve head for optimal mounting
- Screw mounting
- Usable up to SIL3 acc. to IEC 61508
- Surge protection diedo

KCs - certified flameproof Ex d IIC , Ex tb IIC
CCC - certified flameproof Ex d IIC , Ex tb IIC
IECEx - certified flameproof Ex d IIC , Ex tb IIC
ATEX - certified flameproof Ex d IIC , Ex tb IIC
TRCU - certified flameproof Ex d IIC , Ex tb IIC

Specifications

Model	ESV-31 ... R	ESV-32 ... R
Operating Air Pressure	1.5 - 10 bar	
Air Supply (Max.)	15 bar	
Operating Voltage / Power	DC 24V : 3.4W	
Voltage Tolerance	10%	
Frequency	50Hz / 60Hz	
Explosion Proof Class	Ex d IIC T6 / T5 / T4 , Ex tb IIIC T85 / T100 / T135, IP66	
Operating Ambient Temperature	T6 : -30 - +50 T5 : -30 - +65 , T4 : -30 - +80	
Flow Capacity(Cv)	0.9	
Mounting Configuration	Screw interface	
Pneumatic Connections	PT(Rc) 1/4 or NPT 1/4	
Electrical Connection	PF(G) 1/2 , NPT 1/2 , M20 x 1.5	
Coil Insulation Grade	Class F / Class H	
Operating type	Nomally - Closed	Nomally - Open
Duty Cycle	100%	
Valve body material	Aluminum die-cast or Stainless steel 316	
Coil housing material	Aluminum die-cast or Stainless steel 316	
Weight (Valve body / Coil housing)	Aluminum / Aluminum : 0.8 kg Aluminum / SS316 : 1.8 kg SS316 / SS316 : 2.1 kg	

Rotatable Valve Head

The ESV valve head can be rotated by 90° to the right or to the left for an optimal mounting as shown below

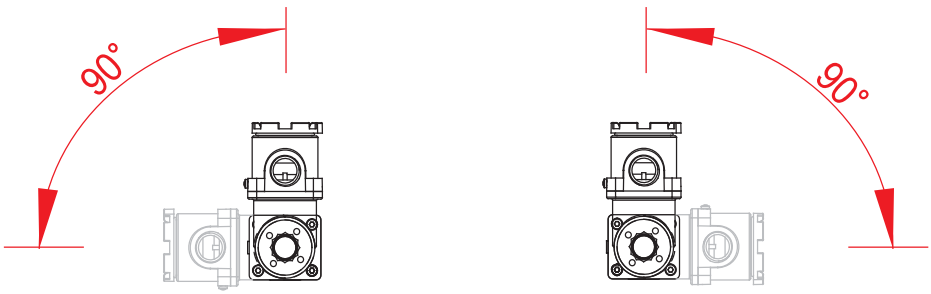

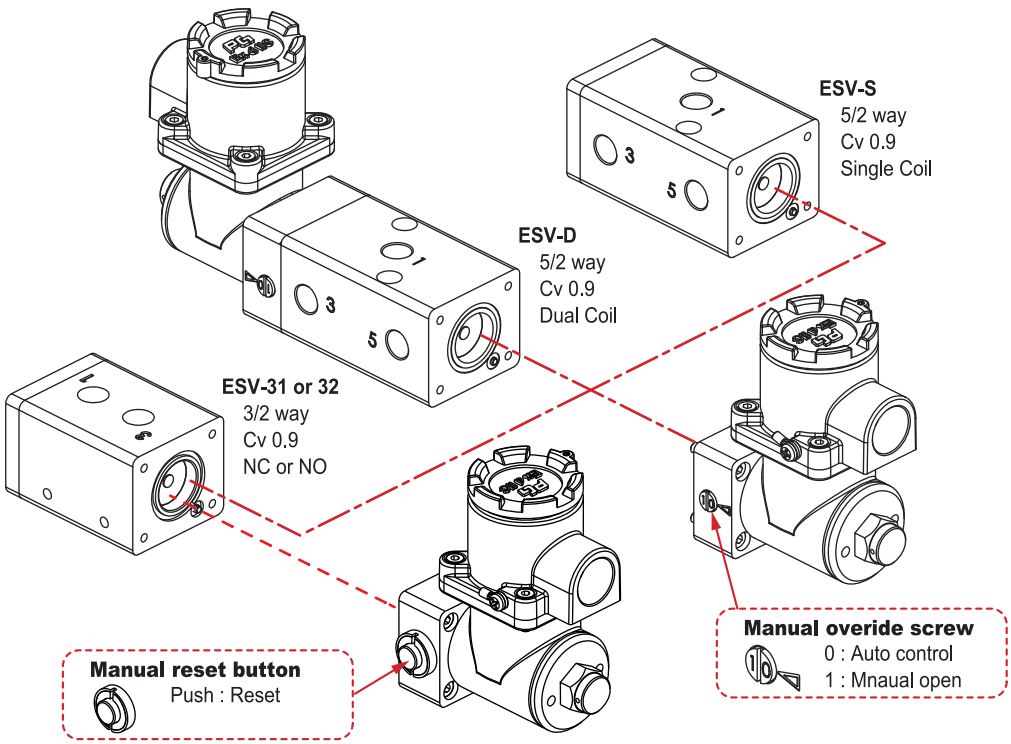

Ordering Guide

ESV Series	–	Operating Type	Body Material (valve body - coil housing)	–	Operating Voltage	Connections (pneumaitc - electrical)	–	Protection & SIL Class	Coil Class	Manual Option
ESV		**S** 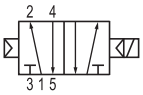 5/2 way / Single Coil Cv 0.9 **D** 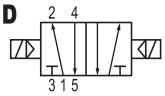 5/2 way / Dual Coil Cv 0.9 **31** 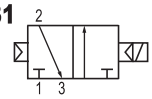 3/2 way / N.C. Cv 0.9 **32** 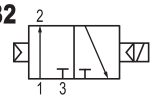 3/2 way / N.O. Cv 0.9	**Blank** Aluminum - Aluminum die-cast **S** SS316 - Aluminum die-cast (only NPT 1/4 pneumatic connections) **C** SS316 - SS316 (Pneumatic : NPT 1/4) (Electrical : NPT 1/4, M20)		**A220** 220VAC **A110** 110VAC **D24** 24VDC	**P** PT 1/4 - PF 1/2 **M** PT 1/4 - M20x1.5 **N** NPT 1/4 - NPT 1/2 **K** NPT 1/4 - M20x1.5		**F** KCs / CCC IECEx / ATEX - Ex d IIC T6..T4 - Ex tb IIIC T85/T100/T135 **E** EAC / TRCU - Ex d IIC T6..T4 - Ex tb IIIC T85/T100/T135 - Operating Temp. -40 - +80℃ Up to SIL3	**Blank** Class F **H** Class H	**Blank** Manual overide screw **R** Manual reset button (Only 3/2way) (Only 24Vdc)

Ex) **ESV - S - A220P - F** : 5/2 way single coil , Aluminum - aluminum die-cast , 220VAC , PT1/4-PF1/2 , KC Ex d IIC , Class F coil

ESV-S

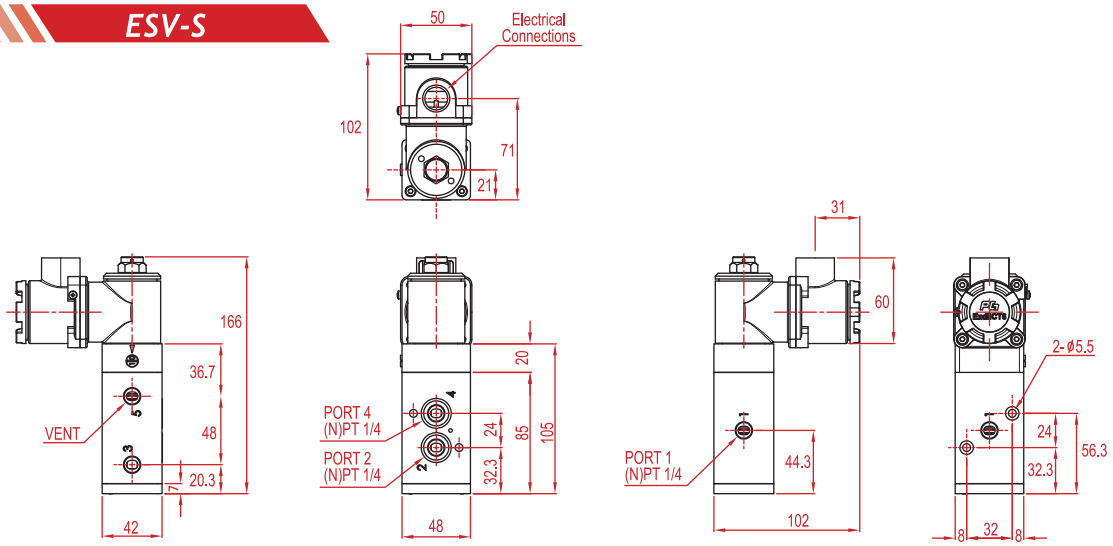

Symbol

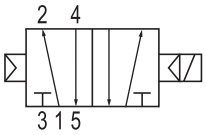

ESV-D

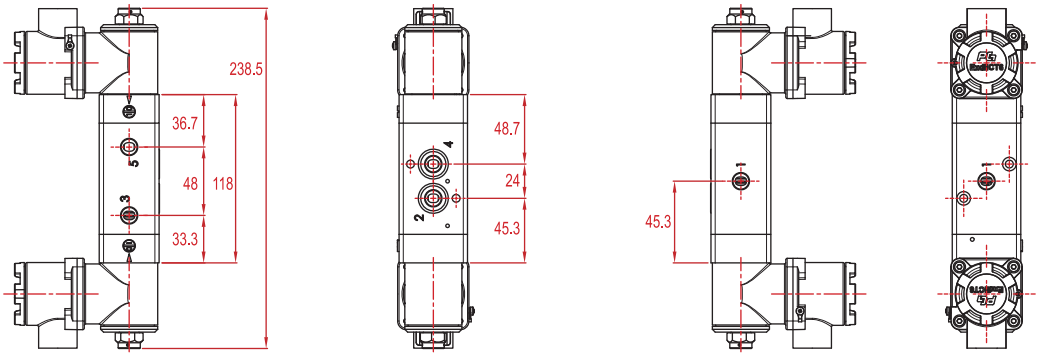

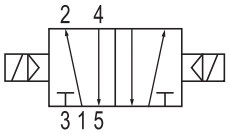

ESV-31 / 32

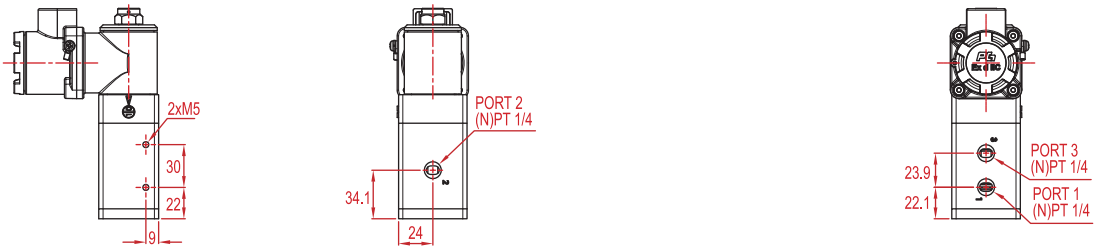

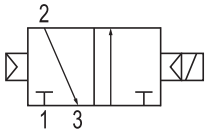

ESV-31
< Normally - closed >

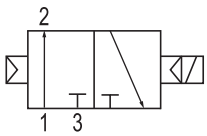

ESV-32
< Normally - open >

< ESV10-S >

< ESV10-D >

Weatherproof to IP65

- 5 port pilot / no lubrication
- Excellent durability
- Suitable for operation of even large-sized actuators with large effective section area of valve
- Suitable for PLC control system and computerized system due to a low power consumption
- Direct NAMUR mounting type

Specifications

Model		ESV10 - S	ESV10 - D
Fluid		Air, Inert Gas	
Pneumaitc Connections		PT(Rc) 1/4 / NPT 1/4 / PF(G) 1/4	
Electrical Connection(s)		PG9	
Effective Sectional Area(Cv)		31.2 mm^2 (1.7)	
Opeerating Pressure Range		1.5 - 9 bar	
Maximum Operating Frequency		5 cycle / sec.	
Operating (Response) Time		Less than 30ms	
Lubrication		Non-lubricant (if necessary, turbine oil ISO VG32 or equivalent recommended)	
Manual Operation		Non-lock push type	
Power Consumption	DC	2.8 W	
	AC	4.5 / 3.6VA (50 / 60Hz)	
Voltage Fluctuation Tolerance		± 10% of applicable voltage	
Operating Temperature		+5℃ - +60℃	
Coil Insulation Class		Class F	
Protection Class		IP65	
Applicable Cylinder Size for Reference		Ø32 - Ø125	
Weight		330g	410g

Mounting

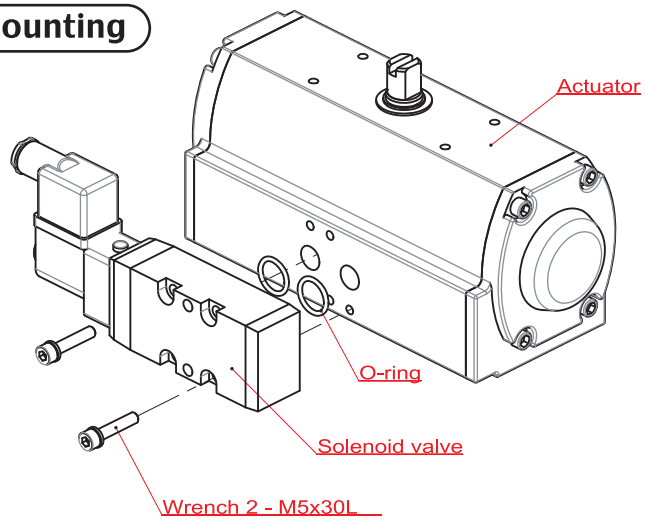

How to Order

ESV10	—	Coil Type	Pneumatic Connections	Operating Voltage	Wiring Method

Description	Code	Description	Code
Coil type :	S : Single coil (return type) D : Dual coil (hold type)	**Operating Volatage :**	1 : AC 100/110V 50/60Hz 2 : AC 200/220V 50/60Hz 3 : DC 24V 4 : DC 12V 5 : DC 24V
Pneumatic Connecitions :	R : PT(Rc) 1/4 N : NPT 1/4 G : PF(G) 1/4	**Wiring Method :**	D : DIN connector Z : DIN connector with lamp and surge killer

Symbol of Operation

Single Coil (return type)

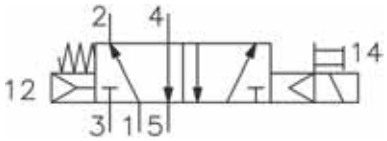

Dual Coil (hold type)

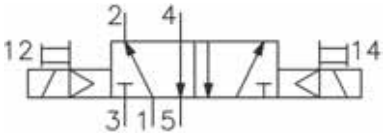

Dimensions

Single Coil Type

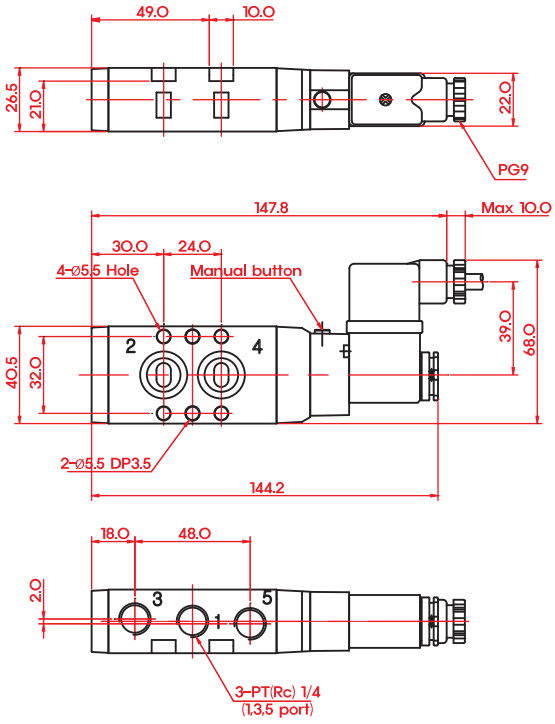

Dual Coil Type

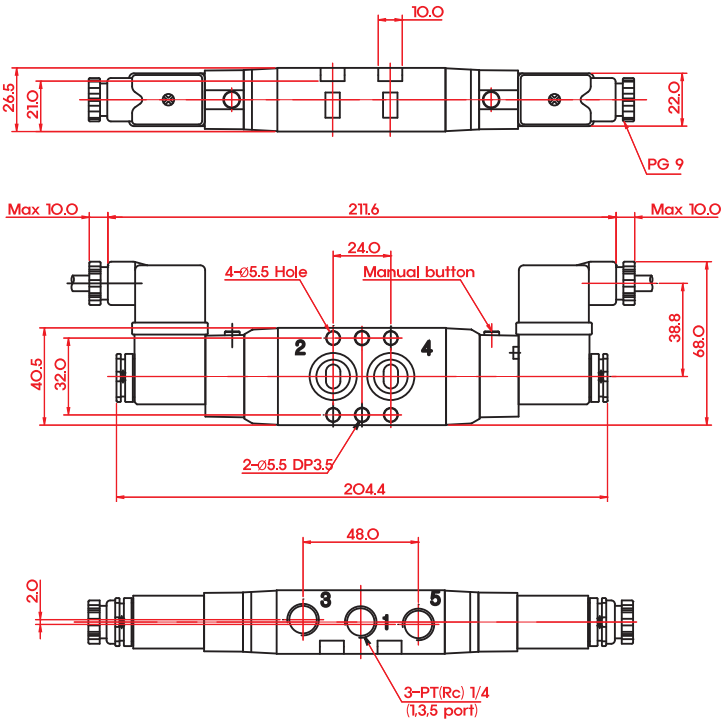

POWER-GENEX®

FR Series

Filter Regulator

All innovation
on driving your valve automation

www.powergenex.com

Air Filter Regulator
(with 1/4 ports)

Valve air unit essential to provide clean and dry supply air to valve positioners, solenoid valves and pneumatic actuators

Features

- Rugged aluminum die-cast housing
- Optional stainless steel 316 housing
- Stable setting pressure
- High capacity with 5 micron filter
- Self-relief function to balance output and settnig pressures
- High flow capacity

Specifications

Model	FR-10	FR-11
Port Size	PT(Rc) 1/4 or NPT 1/4	NPT 1/4
Fluid	Air	
Output Pressure Range	0 - 4 bar (60 psi) / 0 - 8 bar (120 psi)	
Max. Supply Pressure	15 bar (225 psi)	
Operating and Fluid Temperature	-20℃ to +70℃	
Supply Air	Filtered compressed, dry and non oiled air (up to 5 micron)	
Gauge Port Size	PT(Rc) 1/8	
Filteration	5 micon	
Housing Material	Aluminum die-cast	Stainless steel 316
Pressure Gauge Material	Stainless steel	
Weight	0.5 kg	1 kg

Dimensions

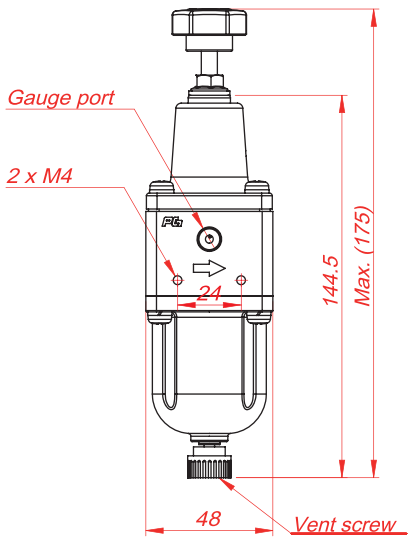

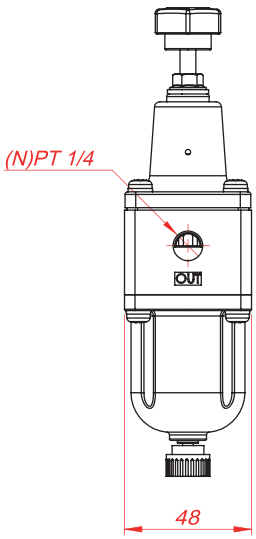

How to Order

FR [Body Material] - [Port Size] [Output Pressure Range]

Description	Code
Body Material	10 : Aluminum die-cast 11 : Stainless steel 316
Port Size	R : PT(Rc) 1/4 N : NPT 1/4
Output Pressure Range	1 : 0 - 4 bar (60 psi) 2 : 0 - 8 bar (120 psi)

FR20 Series

Air Filter Regulator
(with 1/4 ports)

Valve air unit essential to provide clean and dry supply air to valve positioners, solenoid valves and pneumatic actuators

Features

- Rugged aluminum die-cast or stainless steel 316 housing
- Excellent stability and repeatability
- Outstanding sensitivity with precise setting
- High capacity with 5 micron filter
- Self-relief function to balance output and settnig pressures
- High flow capacity
- Optional auto-drain (float type)

Specifications

Model	FR-20	FR-21
Port Size	PT(Rc) 1/4 or NPT 1/4	NPT 1/4
Fluid	Air	
Output Pressure Range	0 - 4 bar (60 psi) / 0 - 8 bar (120 psi)	
Max. Supply Pressure	15 bar (225 psi)	
Operating and Fluid Temperature	-20℃ to +70℃	
Supply Air	Filtered compressed, dry and non oiled air (up to 5 micron)	
Gauge Port Size	PT(Rc) 1/8	
Filteration	5 micon	
Housing Material	Aluminum die-cast	Stainless steel 316
Pressure Gauge Material	Stainless steel	
Weight	0.65 kg	1.4 kg

Dimensions

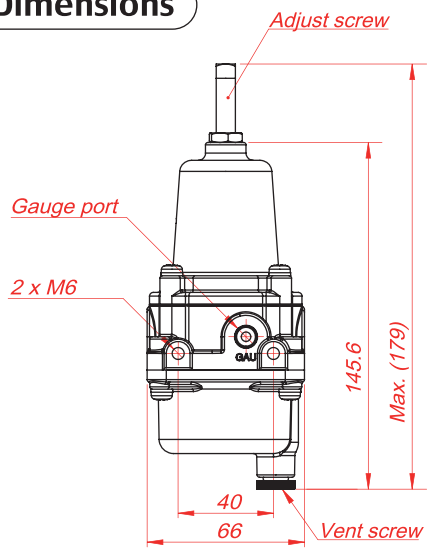

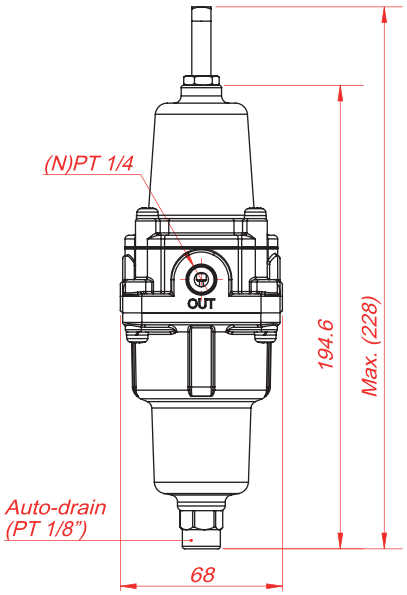

How to Order

FR	Body Material	-	Port Size	Output Pressure Range	Operating Temp.	-	Options

Description	Code	
Body Material	20 : Aluminum die-cast	
	21 : Stainless steel 316	
Port Size	R : PT(Rc) 1/4	N : NPT 1/4
Output Pressure Range	1 : 0 - 4 bar (60 psi)	2 : 0 - 8 bar (120 psi)
Operating Temperature	0 : -20 - +70℃	1 : -20 - +120℃
	2 : -40 - +80 ℃	
Options	M : Manual drain	A : Auto drain

FR30 Series

Air Filter Regulator
(with 1/2 or 3/4 ports)

Valve air unit essential to provide clean and dry supply air to valve positioners, solenoid valves and pneumatic actuators

Features

- Rugged aluminum die-cast or stainless steel 316 housing
- Excellent stability and repeatability
- Outstanding sensitivity with precise setting
- High capacity with 5 micron filter
- Self-relief function to balance output and settnig pressures
- High flow capacity
- Optional auto-drain (float type)

Specifications

Model	FR-30	FR-31
Port Size	PT(Rc) 1/2, NPT 1/2 PT(Rc) 3/4, NPT 3/4	NPT 1/2 NPT 3/4
Fluid	Air	
Output Pressure Range	0 - 4 bar (60 psi) / 0 - 8 bar (120 psi)	
Max. Supply Pressure	15 bar (225 psi)	
Operating Temperature	-20℃ to +70℃	
Supply Air	Filtered compressed, dry and non oiled air (up to 5 micron)	
Gauge Port Size	PT(Rc) 1/8	
Filteration	5 micon	
Housing Material	Aluminum die-cast	Stainless steel 316
Pressure Gauge Material	Stainless steel	
Weight	1.6 kg	3.4 kg

Dimensions

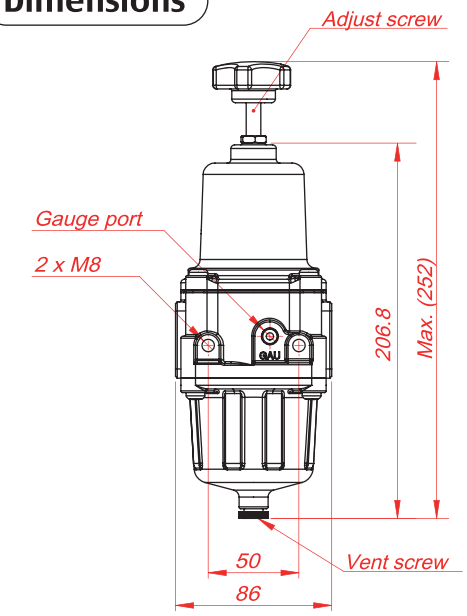

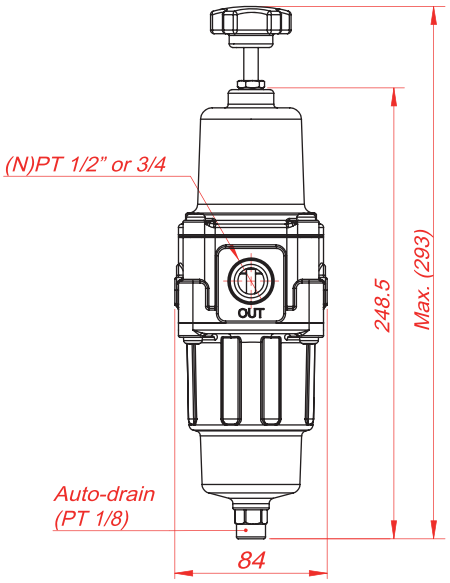

How to Order

FR	Body Material	-	Port Size	Output Pressure Range	Operating Temp.	-	Options

Description	Code	
Body Material	30 : Aluminum die-cast 31 : Stainless steel 316	
Port Size	1 : PT (Rc) 1/2 3 : PT (Rc) 3/4	2 : NPT 1/2 4 : NPT 3/4
Output Pressure Range	1 : 0 - 4 bar (60 psi)	2 : 0 - 8 bar (120 psi)
Operating Temperature	0 : -20 - +70℃ 2 : -40 - +80℃	1 : -20 - +120℃
Options	M : Manual drain	A : Auto drain

POWER-GENEX®

AVB Series

Air Volume Booster

All innovation
on driving your valve automation

www.powergenex.com

Safety Integrity Level
SIL3
IEC 61508 / IEC 61511

AVB-1000 Series

Air Volume Booster
(with 1/4 or 3/8 ports)

< AVB-1000 > CE Ex II2 G/D

The AVB-1000 series is mounted between the positioner and actuator. It provides the actuator with a high air flow output whose pressure corresponds exactly to the signal pressure

Features

- Delivers high air volume to actuator rapidly
- Tunes a unit response to eliminate an actuator overshoot or overdamping
- Provides a tight shut off to reduce a costly air consumption
- Optional 1/4 or 3/8, PT or NPT supply and output ports

< AVB-1100 > CE Ex II2 G/D

Options

- High temperature : -20℃ - +120℃
- Low temperature : -40℃ - +80℃

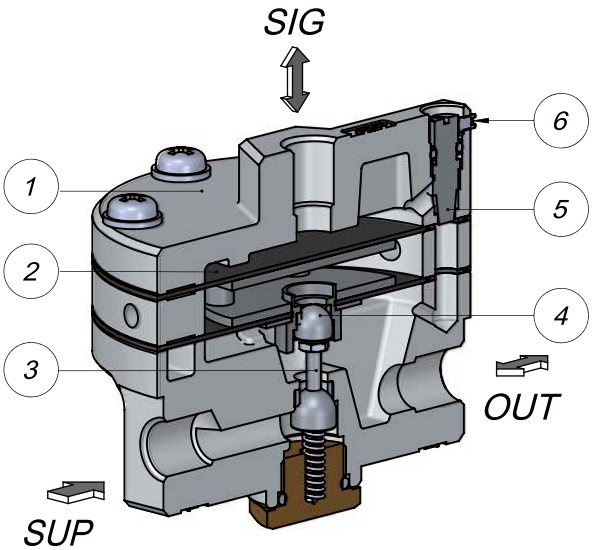

< Sectional View of AVB-1000 >

No.	Description	AVB-1000	AVB-1100
1	Body	ALDC 12.1	SS316
2	Diaphragm	N.B.R	N.B.R
3	Inet valve	SS304	SS316
4	Exhaust valve	SS304	SS316
5	Adjusting screw	SS304	SS316
6	Lock screw	SS304	SS316

How to Order

AVB - 1 | Body Material | Port Size | Operating Temp.

Description	Code
Body Material :	0 : Aluminum die-cast 1 : Stainless steel 316
Port Size :	0 : PT (Rc) 1/4 1 : NPT 1/4 2 : PT (Rc) 3/8 3 : NPT 3/8
Operating Temperature :	0 : -20 ~ +80℃ (standard) 1 : -20 ~ +120℃ (high temp.) 2 : -40 ~ +80℃ (low temp.)

Specifications

Model	AVB-1000	AVB-1100
Conditions of Supply Air		
Supply Air Pressure	Max. 10 bar (150 psi)	
Signal Air Pressure (positioner output)	Max. 7 bar (105 psi)	
Supply Air Quality acc. to ISO 8573-1	Filtered, compressed dry and non-oiled to meet Class 3	
Closed Loop Control		
Pressure Ratio : signal to output	1 : 1	
Dead Band	2% (0.016 bar)	
Hysteresis	1 %	
Linearity	±1% F.S	
Flow Cv		
Supply Cv	1.2	
Exhaust Cv	1.1	
Other Operating Parameters		
Operating Ambient Temperature	-20 ~ +80℃ (std), -20 ~ +120℃ (high), -40 ~ +80℃ (low)	
Weight	0.56 kg	1.2 kg
Connecting Port Threads		
Supply (SUP) / Output (OUT)	PT 1/4, NPT 1/4, PT 3/8, NPT 3/8	NPT 1/4, NPT 3/8
Signal (SIG)	PT 1/4, NPT 1/4	NPT 1/4
Materials		
Body	Aluminum die-cast	Stainless steel 316
Diaphragm	NBR	
O-rings	NBR	
Protection Class		
Explosion-proof	CE Ex II2 G/D	

Dimensions

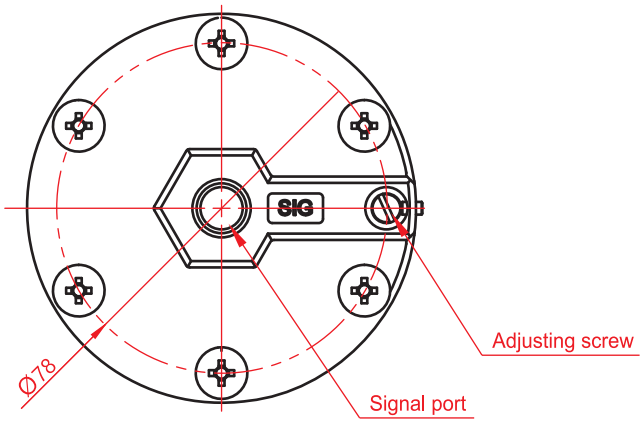

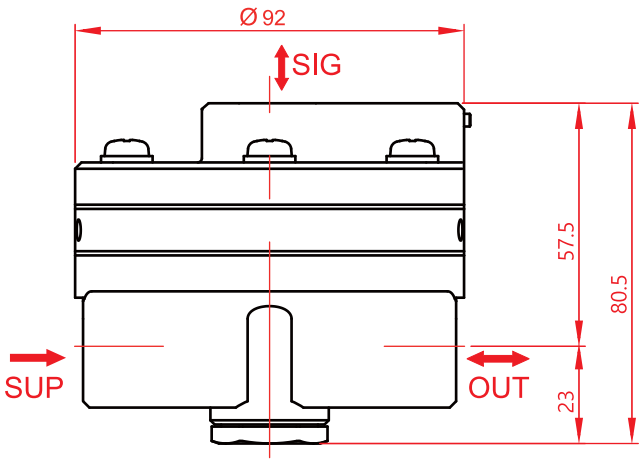

AVB-2000 Series

Air Volume Booster
(with 1/2 ports)

< AVB-2000 > CE Ex II2 G/D

< AVB-2100 > CE Ex II2 G/D

The AVB-2000 series is the heavy-duty volume booster relays with bigger ports and a more flow capacity to help a large actuator move faster by converting a low flow control signal to the higher flow

Features

- Delivers a high air volume for a fast actuator movement
- Tunes a unit response to eliminate an actuator overshoot or overdamping
- Provides a tight shut off to reduce a costly air consumption
- Available in aluminum or stainless steel 316
- Exhaust filters are installed for prevention of contamination by foreign substances from outside

Options

- NPT 1/2 threaded exhaust ports
- Supply pressure gauge port
- High temperature : -20℃ - +120℃
- Low temperature : -40℃ - +80℃

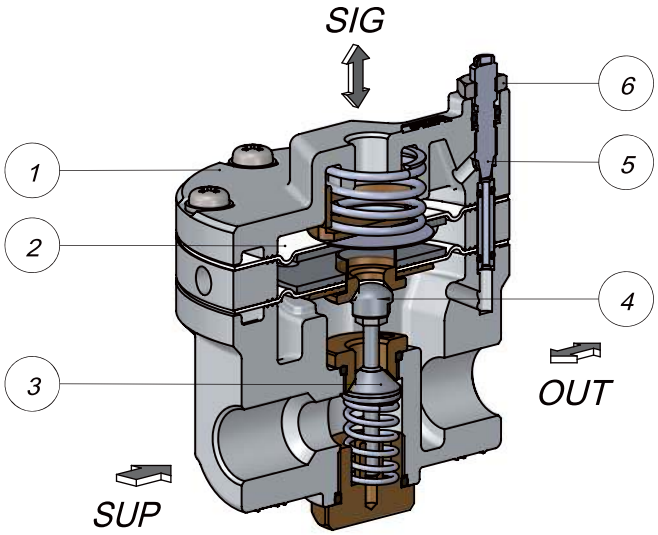

< Sectional View of AVB-2000 >

No.	Description	AVB-2000	AVB-2100
1	Body	ALDC 12.1	SS316
2	Diaphragm	N.B.R	N.B.R
3	Inet valve	SS304	SS316
4	Exhaust valve	SS304	SS316
5	Adjusting screw	SS304	SS316
6	Lock nut	SS304	SS316

How to Order

AVB - 2 [Body Material] [Port Size] [Operating Temp.] - [Options]

Description	Code
Body Material :	0 : Aluminum die-cast 1 : Stainless steel 316
Port Size :	0 : PT (Rc) 1/2 1 : NPT 1/2
Operating Temperature :	0 : -20 ~ +80℃ (standard) 1 : -20 ~ +120℃ (high temp.) 2 : -40 ~ +80℃ (low temp.)
Options :	N : None A : Supply pressure gauge port B : NPT 1/2 threaded exhaust port C : A + B

Specifications

Model	AVB-2000	AVB-2100
Conditions of Supply Air		
Supply Air Pressure	Max. 10 bar (150 psi)	
Signal Air Pressure (positioner output)	Max. 7 bar (105 psi)	
Supply Air Quality acc. to ISO 8573-1	Filtered, compressed dry and non-oiled to meet Class 3	
Closed Loop Control		
Pressure Ratio : signal to output	1 : 1	
Dead Band	2% (0.016 bar)	
Hysteresis	1 %	
Linearity	±1% F.S	
Flow Cv		
Supply Cv	3.1	
Exhaust Cv	2.4	
Other Operating Parameters		
Operating Ambient Temperature	-20 ~ +80℃ (std), -20 ~ +120℃ (high), -40 ~ +80℃ (low)	
Weight	1.0 kg	2.4 kg
Connecting Port Threads		
Supply (SUP) / Output (OUT)	PT 1/2 or NPT 1/2	NPT 1/2
Signal (SIG)	PT 1/4 or NPT 1/4	NPT 1/4
Materials		
Body	Aluminum die-cast	Stainless steel 316
Diaphragm	NBR (std)	
O-rings	NBR (std)	
Protection Class		
Explosion-proof	CE Ex II2 G/D	

Dimensions

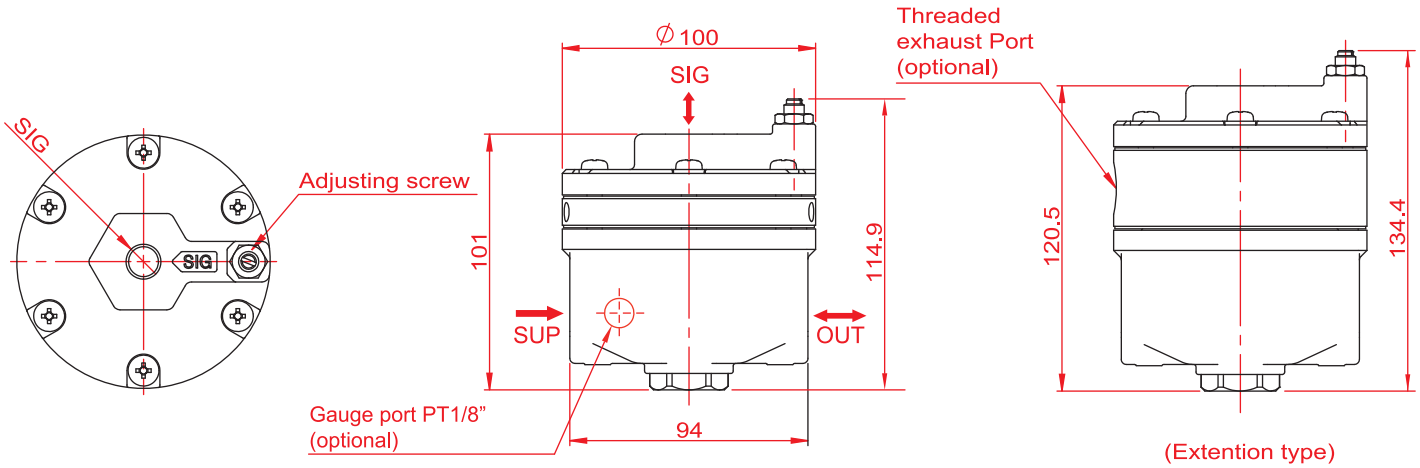

Air Volume Booster
(with 3/4 ports)

< AVB-3000 > CE Ex II2 G/D

< AVB-3100 > CE Ex II2 G/D

The AVB-3000 series is the heavy-duty volume booster relays with bigger ports and a more flow capacity to help a large actuator move faster by converting a low flow control signal to the higher flow

Features

- Delivers a high air volume for a fast actuator movement
- Tunes a unit response to eliminate an actuator overshoot or overdamping
- Provides a tight shut off to reduce a costly air consumption
- Available in aluminum or stainless steel 316
- Exhaust filters are installed for prevention of contamination by foreign substances from outside

Options

- NPT 1/2 threaded exhaust ports
- Supply pressure gauge port
- High temperature : -20℃ - +120℃
- Low temperature : -40℃ - +80℃

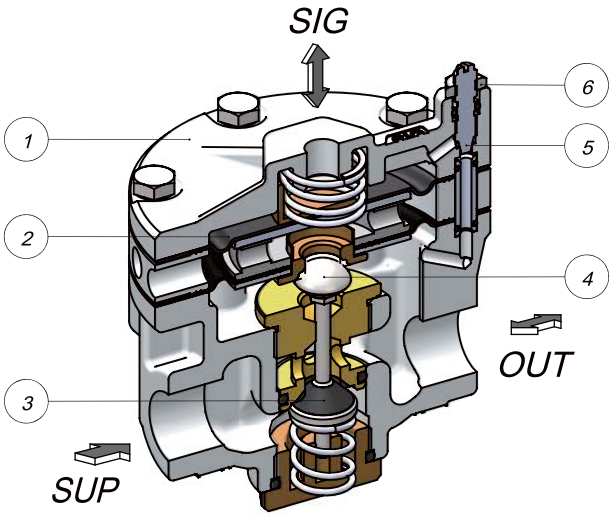

< Sectional View of AVB-3000 >

No.	Description	AVB-3000	AVB-3100
1	Body	ALDC 12.1	SS316
2	Diaphragm	N.B.R	N.B.R
3	Inet valve	SS304	SS316
4	Exhaust valve	SS304	SS316
5	Adjusting screw	SS304	SS316
6	Lock nut	SS304	SS316

How to Order

AVB - 3 [Body Material] [Port Size] [Operating Temp.] - [Options]

Description	Code
Body Material :	0 : Aluminum die-cast 1 : Stainless steel 316
Port Size :	0 : PT (Rc) 3/4 1 : NPT 3/4
Operating Temperature :	0 : -20 ~ +80℃ (standard) 1 : -20 ~ +120℃ (high temp.) 2 : -40 ~ +80℃ (low temp.)
Options :	N : None A : Supply pressure gauge port B : NPT 1/2 threaded exhaust port C : A + B

Specifications

Model	AVB-3000	AVB-3100
Conditions of Supply Air		
Supply Air Pressure	Max. 10 bar (150 psi)	
Signal Air Pressure (positioner output)	Max. 7 bar (105 psi)	
Supply Air Quality acc. to ISO 8573-1	Filtered, compressed dry and non oiled to meet Class 3	
Closed Loop Control		
Pressure Ratio : signal to output	1 : 1	
Dead Band	2% (0.016 bar)	
Hysteresis	1 %	
Linearity	±1% F.S	
Flow Cv		
Supply Cv	5.1	
Exhaust Cv	5.1	
Other Operating Parameters		
Operating Ambient Temperature	-20 ~ +80℃ (std), -20 ~ +120℃ (high), -40 ~ +80℃ (low)	
Weight	2.0 kg	4.3 kg
Connecting Port Threads		
Supply (SUP) / Output (OUT)	PT 3/4 or NPT 3/4	NPT 3/4
Signal (SIG)	PT 1/4 or NPT 1/4	NPT 1/4
Materials		
Body	Aluminum die-cast	Stainless steel 316
Diaphragm	NBR (std)	
O-rings	NBR (std)	
Protection Class		
Explosion-proof	CE Ex II2 G/D	

Dimensions

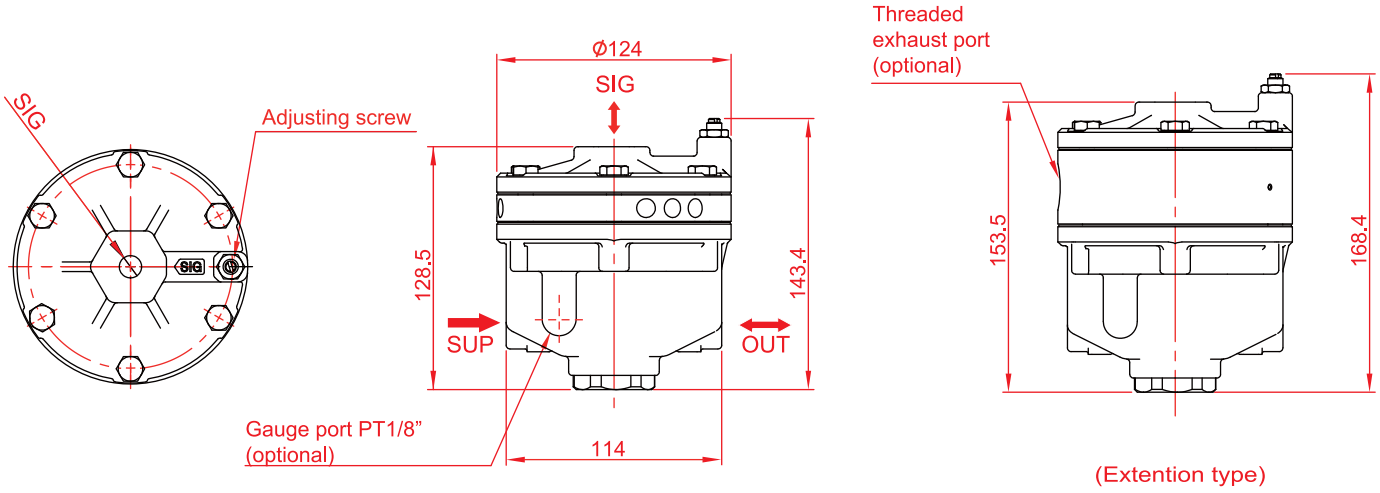

Applications

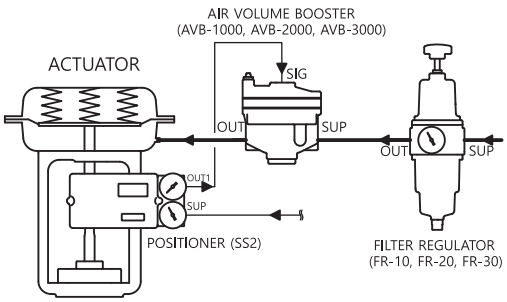

SINGLE ACTING

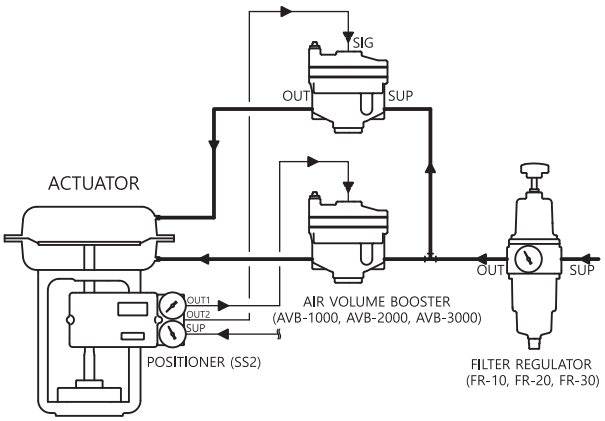

DOUBLE ACTING

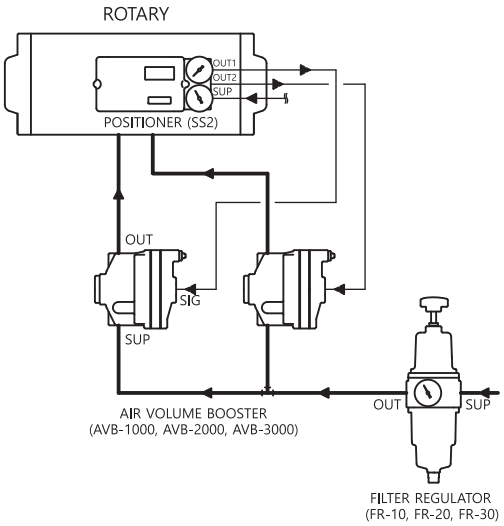

ROTARY ACTUATOR

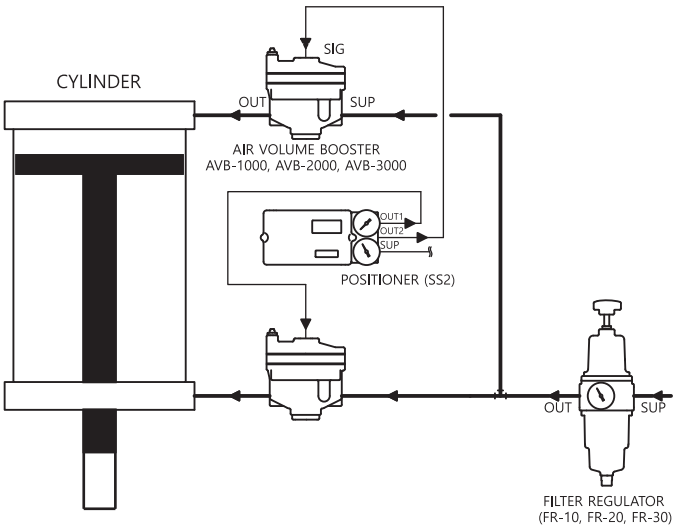

CYLINDER ACTUATOR

POWER-GENEX®

POWER-GENEX LTD.

99, Eunbong-ro, Namdong-gu,
Incheon 405-848 Korea
Tel : +82-32-812-6644
Fax : +82-32-812-6645
Website : http://www.powergenex.com
E-mail : sales@powergenex.com (overseas sales)
sales2@powergenex.com (domestic sales)

POWER-GENEX®

LSB Series

Valve Position Monitor

All innovation
on driving your valve automation

www.powergenex.com

Robust valve position monitor with a good recognizable beacon, various switches and feedback options

Features

- Weatherproof to IP66 & 67 (optionally IP68)
- Rugged aluminum die-cast housing or 316SS
- Various switches and sensors (available with Honeywell / P&F)
- NAMUR mounting shaft or fork lever shaft adjustable for a non-NAMUR pneumatic actuator

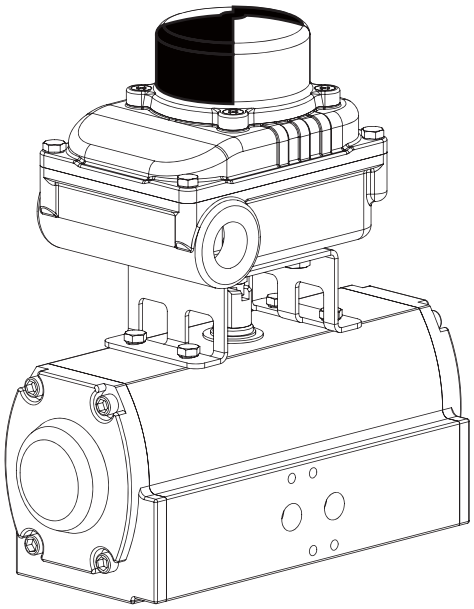

Options

- 2 x SPDT mechanical limit switch
- 4 x SPDT mechanical limit switch
- 2 x P&F proximity sensor

Specifications

Model	LSB-1000	
Protection Class	Ex ia IIC / IP66 & 67 (optionally IP68)	
Switches / Sensors	See page 5	
Operating Temperature	- 40 ~ +100℃ (-40 ~ +212°F)	
Electrical Connections	PF 1/2, NPT 1/2, M20 x 1.5, PG13.5	
Body Material / Painting	Aluminum die-cast / powdered-coating	Stainless steel 316
Weight	0.8 kg	1.5 kg

< With beacon indicator >

< With bottom indicator >

< With stainless steel 316 housing >

Explosion proof robust valve position monitor with a good recognizable beacon, bottom indicator, various switches and feedback options

Features

- Flameproof ATEX / IECEx / EAC / KCs Ex d IIC
- Intrinsic safety ATEX / IECEx / EAC / KCs Ex ia IIC
- Rugged aluminum die-cast housing or optionally stanless steel 316 housing
- Optionally dual beacons or bottom indicator
- Various switches and sensors (available with Honeywell / P&F / Hermetically-sealed magnetic sensor)
- NAMUR mounting shaft or fork lever shaft adjustable for a non-NAMUR pneumatic actuator

Options

- 4 x SPDT mechanical limit switch
- 4 x P&F proximity sensor
- 4 x Hermetically-sealed magnetic sensor
- 4 - 20mA output position transmitter

Specifications

Model	LSB-30xx	LSB-31xx
Explosion proof / Protection Class	Flameproof - Ex d IIC - IP66&67 (optionally IP68)	
	Intrinsic safety - Ex ia IIC - IP66&67 (optionally IP68)	
	Intrinsic safety - Ex ia IIIC - IP66&67 (optionally IP68)	
Switches / Sensors	See page 5	
Operating Temperature	- 40 ~ +110℃ (- 40 ~ +230℉)	
Electrical Connections	PT 3/4, NPT 3/4, PF 1/2, NPT 1/2, M20 x 1.5	NPT 3/4, NPT 1/2
Body Material / Painting	Aluminum die-cast / powdered-coating	Stainless steel 316 / 316L
Weight	2 kg	4 kg

With built-in solenoid valve

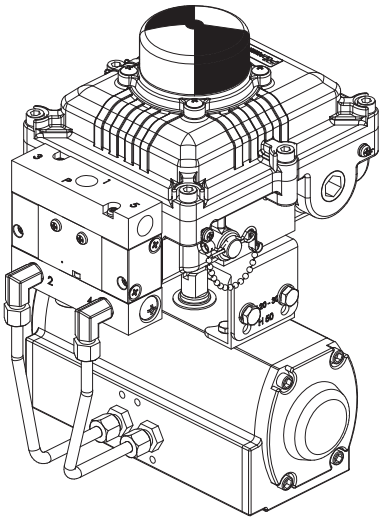

Explosion-proof robust valve position monitor with built-in solenoid and more feedback options and designed to provide an outstanding performance under harsh working environments

Features

- Flameproof ATEX / IECEx / TR-CU / KC Ex d IIB+H_2 T6
- Rugged aluminum die-cast or stainless steel housing
- Compact single unit with built-in solenoid valve
- More economical in costs and simple wiring to a single unit comparison with separate installations of explosion proof limit switches and explosion proof solenoid valve
- Auto / Manual button easy to convert
- NAMUR mounting shaft or fork lever shaft adjustable for a non-NAMUR pneumatic actuator

Options

- 4 x SPDT mechanical limit switch
- 4 x P&F proximity sensor
- 2 x Hermetically-sealed magnetic sensor
- 4 - 20mA output position transmitter

Specifications

Model	LSB-7000	LSB-7100	LSB-7200
Explosion proof / Protection Class	ATEX / IECEx / TR-CU / KC - Ex d IIB+H_2 - IP66&67		
Operating Air Pressure	1.5 ~ 10 bar		
Air Supply Pressure	Max. 10 bar		
Mechanical Switches/Proximity Sensors	See page 5		
Operating Voltage of Solenoid Valve	24 VDC / 48 VDC / 110 VAC / 220 VAC		
Manual Override of Solenoid Valve	Push button type		
Response Time of Solenoid Valve	25 ms		
Coil Insulation Class	Class F		
Operating Temperature	-30 ~ +75℃		
Pneumatic Connections	PT(Rc) 1/4, NPT 1/4		NTP 1/4
Electrical Connections	PT 1, NPT 1 PT 3/4, NPT 3/4, PF 1/2, NPT 1/2		NPT 1, NPT 3/4, NPT 1/2
Body Material	Aluminum die-cast		Stainless steel 316
Solenoid Valve Body Material	Aluminum die-cast	Stainless steel 316	
Weight	2.5 kg	3.5 kg	5.8 kg

Solenoide Valve

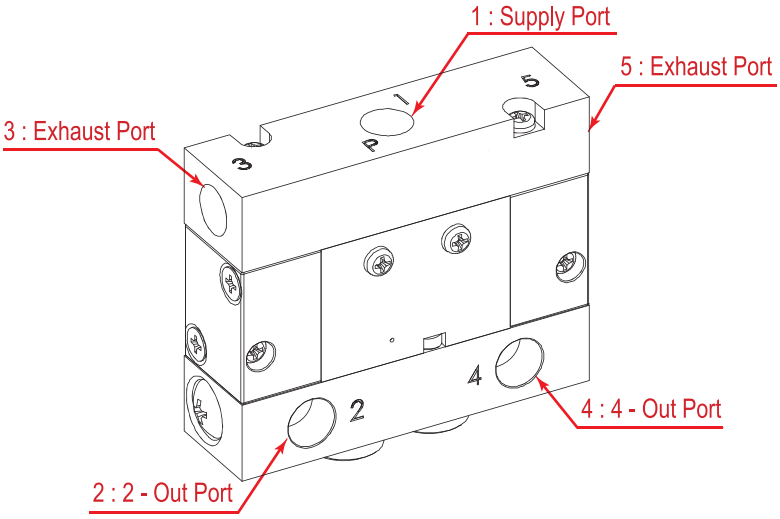

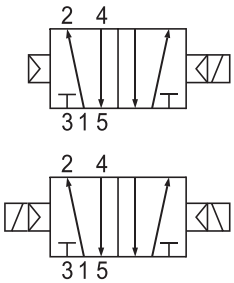

2 Postion with Single Coil

2 Postion with Dual Coils

< Symbols of Operation >

Supply Air		Filtered, compressed, dry and non-oiled air
Supply Air Pressure	2 position with single coil	1.5 ~ 9.9 bar
	2 position with dual coils	1.0 ~ 9.9 bar
Eff. Sectional Area (5 kfg/㎠)		19.0 ㎟
Manual Override		Push button type
Response Time		25 ms or less
Max. Working Frequency		5 c/sec
Power Consumption		AC : 4.5 / 3.6VA (60Hz/50Hz) DC : 2.8W
Coil Insulation Class		Class F or equivalent
Permissible Voltage Variation		±10% of rated voltage
Lubrication		Not required

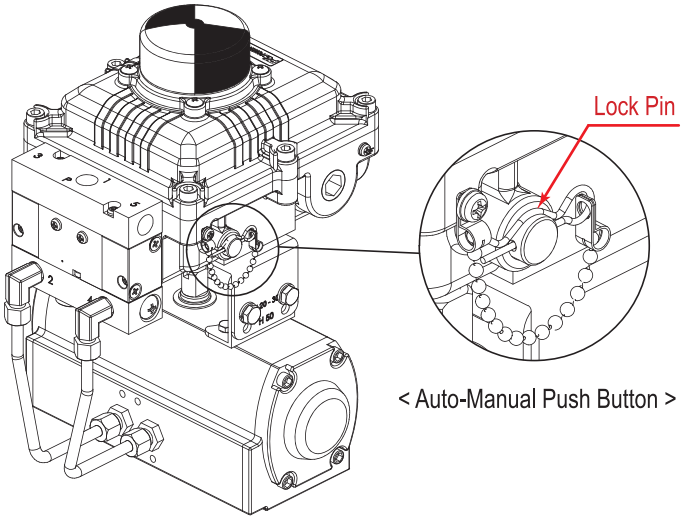

< Auto-Manual Push Button >

Specifications of Switches / Sensors

Mechanical Switches

< SPDT Mechanical Switch - GSM >

Maker	Standard
Switch type	SPDT (Form C)
Contacts	Silver-plated
Approvals	UL, CSA
Electrical Rating	
16 amps / 250 VAC 16 amps / 8 VDC , 10amps / 30 VDC	
Operating Temp.	-30 ~ +130℃

< SPDT Mechanical Switch - V7/V15 >

Maker	Honeywell
Switch type	SPDT (Form C)
Contacts	Silver-plated or gold-plated
Approvals	UL, CSA
Electrical Rating	
Silver : 16 amps / 125 / 250 VAC Gold : 0.1 amps / 125 / 250 VAC	
Operating Temp.	-40 ~ +125℃

< DPDT Mechanical Switch - 22104 >

Maker	Licon
Switch type	DPDT (Form CC)
Contacts	Silver-plated
Approvals	UL, CSA
Electrical Rating	
10 amps / 125 / 250 VAC 10 amps / 28 VDC	
Operating Temp.	-30 ~ +80℃

Proximity Sensors

Part Number / Maker	NJ2-V3-N / P&F
Switching element function	NAMUR NC
Nominal Ratings	
Nominal voltage	8.2 VDC
Switching frequency	0 ~ 1000 Hz
Hysteresis	0.01 ~ 0.1 mm
Current consumption	
Measuring plate not detected	> 3 mA
Measuring plate detected	< 1 mA
Operating Temperature	-25 ~ +100℃

Part Number / Maker	NJ2(4)-12GK-SN / P&F
Switching element function	NAMUR NC
Nominal Ratings	
Nominal voltage	8 VDC
Switching frequency	0 ~ 2000 Hz
Hysteresis	3%
Current consumption	
Measuring plate not detected	> 3 mA
Measuring plate detected	< 1 mA
Operating Temperature	-40(-50) ~ +100℃

Magnetic Proximity Sensors

Part Number / Maker	MS Series / Power-genex
Switch type	SPDT (Form C)
Contacts	Rhoduim / Tungsten
Approvals	UL, CSA
Electrical Ratings	
MS20 : 830 mA / 24VDC, 180 mA / 120VAC MS25 : 1 A / 24VDC, 200 mA / 120VAC MS100 : 2 A / 24VDC, 3 A / 120VAC, 1.5 A / 240VAC	
Operating Temperature	-40 ~ +130℃

Part Number / Maker	ESI-V3-CR / Euroswitch
Switch type	SPDT (Form C)
Contacts	Rhodium
Approvals	ATEX / IECEx / INMETRO Ex ia IIC T6
Electrical Ratings	
830 mA / 24VDC, 180 mA / 120VAC Ex : Ui = 30V, Ii = 250mA, Pi = 1.3w	
Operating Temperature	-20 ~ +80℃

Switch Box Type	Body Material	Switches / Sensors	Position Transmitter	Explosion Proof	Beacon / Indicator	Electrical Connections	Number of Electrical Connections	Feedback Shaft	Mounting Bracket	Coil type	Power Supply	Pneumatic Connections
LSB-1 Weatherproof type	0 Aluminum die-cast 1 Stainless steel 316	Mechanical switches 0 (2) SPDT 2 (4) SPDT P&F Sensors 4 (2) NJ2-V3-N 7 (2) NBB3-V3-Z4 9 (2) NBB2-V3-E2 Autonics sensors 8 (2) PSN17-5D Honeywell J (2) SPDT Hermetically-sealed sensors A (2) MS-25 (1A) C (2) MS-20 (0.8A)	0 None	7 Weatherproof IP67 8 Weatherproof IP68 I7 Ex ia IIC - IP67 I8 Ex ia IIC - IP68	N None A Beacon indicator 90° (Open / Close) T T port indicator L L port indicator	C PF 1/2 D NPT 1/2 E M20 x 1.5 H PG 13.5	2 2 pcs	Rotary type N NAMUR shaft F Fork lever Linear type B Stroke 5 ~ 65mm C Stroke 5 ~ 130mm D Stroke 80 ~ 200mm	Rotary type N None 1 30x80 x20(H) 2 30x80 x30(H) 3 30x130 x30(H) 4 30x130 x50(H) M Multi-size Bracket R Other on request			
LSB-3 Explosion-proof type	0 Aluminum die-cast 1 Stainless steel 316 2 Stainless steel 316L (On request)	Mechanical switches 0 (2) SPDT 2 (4) SPDT 3 (2) DPDT P&F sensors 4 (2) NJ2-V3-N 5 (4) NJ2-V3-N 6 (2) NJ2-12GK-SN or NJ4-12GK-SN 7 (2) NBB3-V3-Z4 9 (2) NBB2-V3-E2 S(2) NJ2-12GM40-E2 R (2) NCN4-V3-NO T (2) SJ3 3.5-S1N Sensors 8 (2) PSN17-5D PNP or NPN N (2) D2VW-5L1-1M Hermetically-sealed proximity sensors (Amp@24VDC) A (2) MS-25 (1A) B (4) MS-25 (1A) C (2) MS-20 (0.8A) D (4) MS-20 (0.8A) E (2) MS-100 (2A) F (4) MS-100 (2A) G (2) ESI-V3-CR H (4) ESI-V3-CR I (2) MONAS I(2A) Honeywell switches J (2) SPDT(SILVER) K (4) SPDT(SILVER) L (2) SPDT(GOLD) M (4) SPDT(GOLD) Other on request	0 None T 4~20mA output signal 1 0~1k output signal 2 0~10k output signal	K7 KCs Ex d IIC - IP67 A7 ATEX / IECEx Ex d IIC - IP67 I7 Ex ia IIC - IP67 K8 KCs Ex d IIC - IP68 A8 ATEX / IECEx Ex d IIC - IP68 I8 Ex ia IIC - IP68	N None A Beacon indicator 90° (Open / Close) B Bottom indicator 90° (Open / Close) C Beacon & bottom indicator 90° (Open / Close) T T port indicator L L port indicator	A PF 3/4 B NPT 3/4 C PF 1/2 D NPT 1/2 E M20 x 1.5 I M25 x 1.5	2 2 pcs 3 3 pcs					
LSB-7 Explosion-proof type (built-in solenoid v/v)	0 Aluminum die-cast 1 Aluminum die-cast switch box / 316SS solenoid V/V 2 316SS switch box & solenoid V/V		0 None T 4~20mA output signal	K KC Ex d IIB+H_2 - IP67 A ATEX / IECEx Ex d IIB+H_2 - IP67	N None A Beacon indicator 90° (Open / Close) T T port indicator L L port indicator	A PF 3/4 B NPT 3/4 C PF 1/2 D NPT 1/2 E M20 x 1.5 I M25 x 1.5 F PF 1 G NPT 1	2 2 pcs 3 3 pcs 4 4 pcs	Rotary type N NAMUR shaft F Fork lever Linear type B Stroke 5 ~ 65mm C Stroke 5 ~ 130mm D Stroke 80 ~ 200mm	Rotary type N None M Multi-size Bracket R Other on request	N None S Single coil D Dual coil	N None A 220VAC B 110VAC C 24VDC D 48VDC	N None 1 PT 1/4 2 NPT 1/4
Switch Box Type	Body Material	Switches / Sensors	Position Transmitter	Explosion Proof	Beacon / Indicator	Electrical Connections	Number of Electrical Connections	Feedback Shaft	Mounting Bracket	Coil type	Power Supply	Pneumatic Connections

< LSB-1000 >

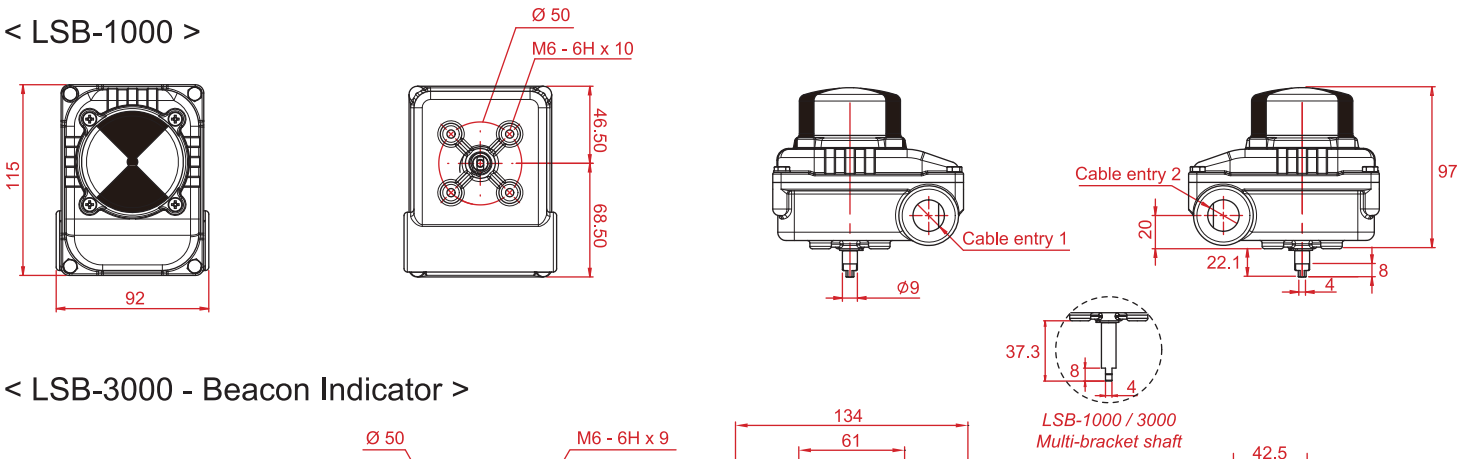

< LSB-3000 - Beacon Indicator >

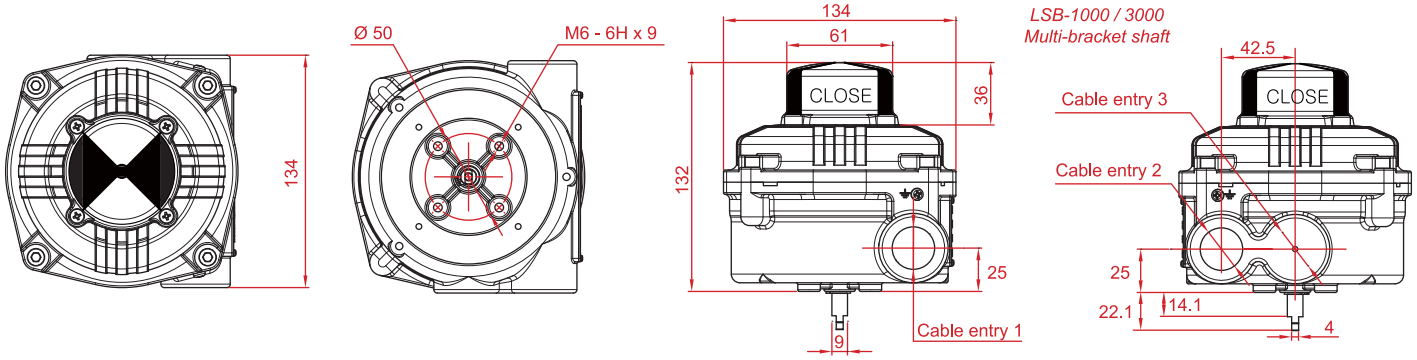

< LSB-3000 - Bottom Indicator >

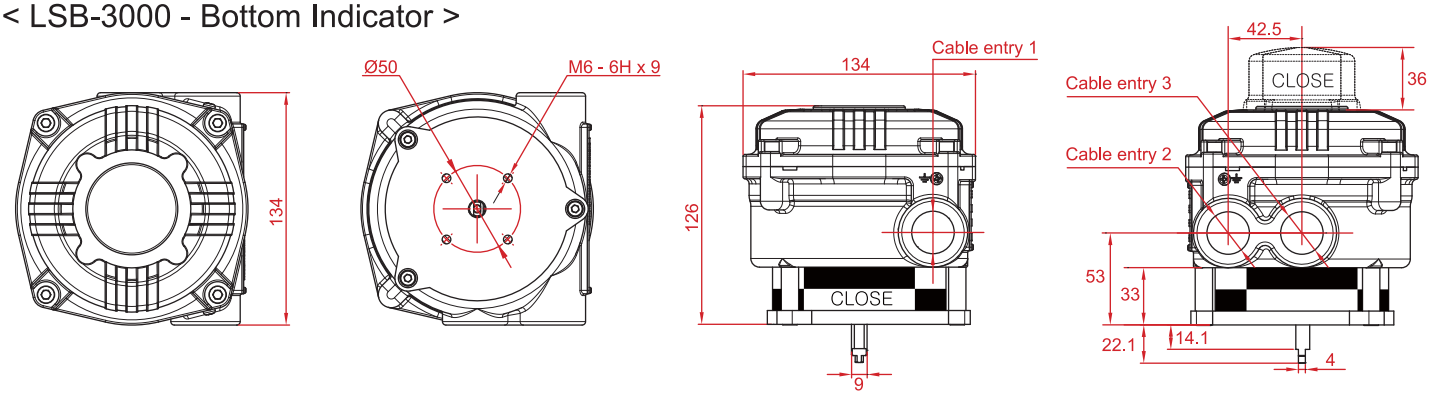

< LSB-7000 >

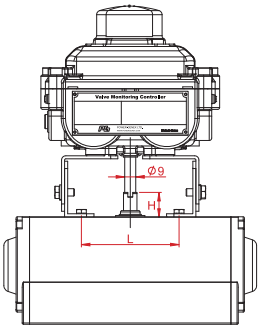

Size Variation of Multi-Size Bracket

1) 80 x 30 x 20 (H) , 4) 130 x 30 x 20 (H)
2) 80 x 30 x 30 (H) , 5) 130 x 30 x 30 (H)
3) 80 x 30 x 50 (H) , 6) 130 x 30 x 50 (H)

H : Rotary Actuator Shaft Height
L : Length (80 or 130mm)

< Dual Coil Type >

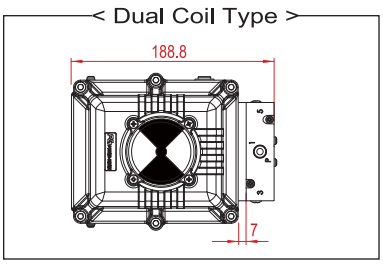

< Single Coil Type >

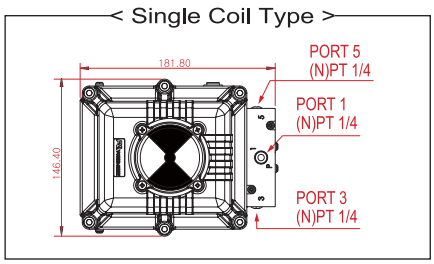

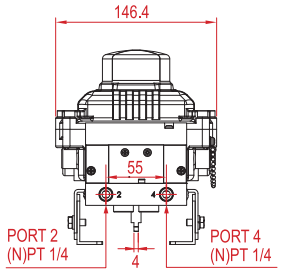

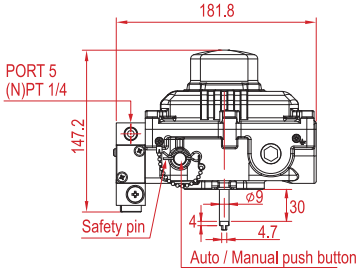

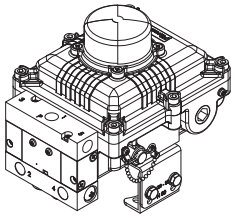

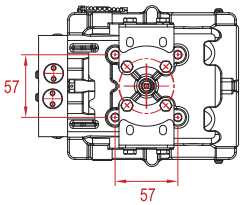

POWER-GENEX®

< Bracket : LSB-1000 / 3000 >

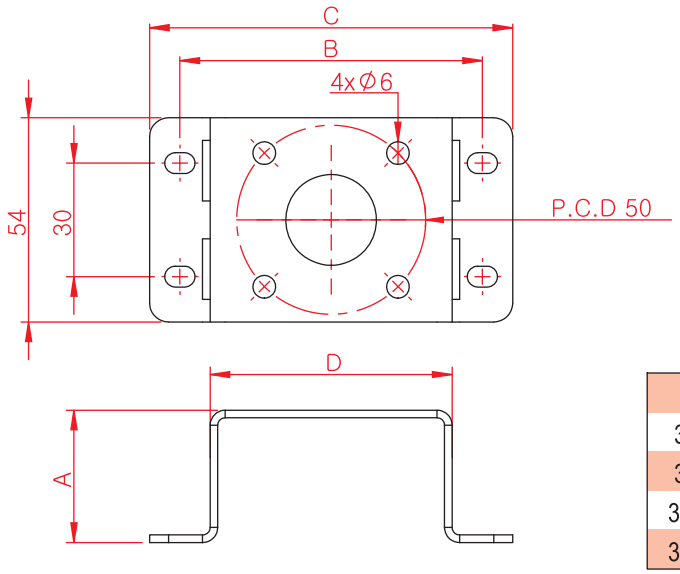

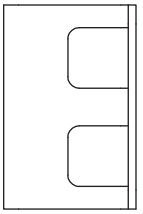

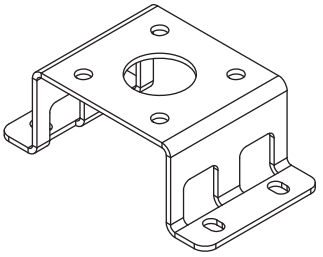

	A	B	C	D
30x80x20	35	80	96	64
30x80x30	45	80	96	64
30x130x30	45	130	150	100
30x130x50	65	130	150	100

< Wiring Diagram >

	LSB-1000 / 3000 / 7000	LSB-3000 / 7000
Mechanical Switches / Magnetic Sensors (SPDT)	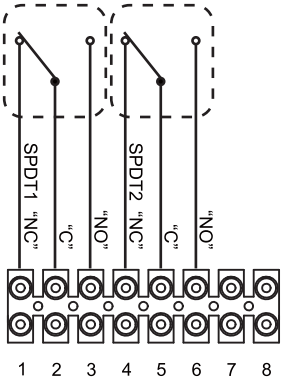	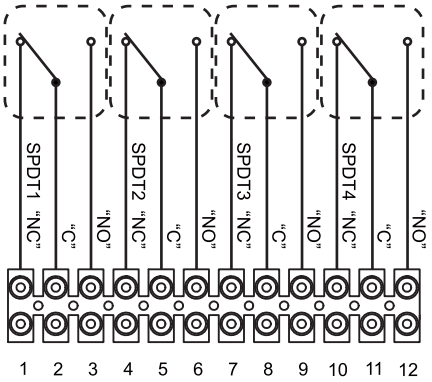
Mechanical Switches (DPDT)		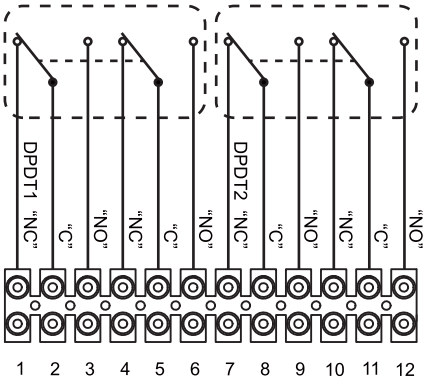
Proximity Sensors (P&F)	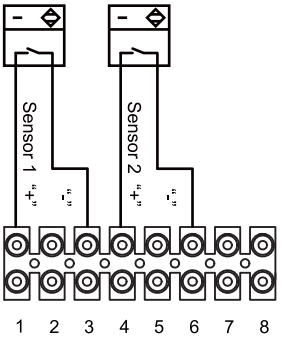	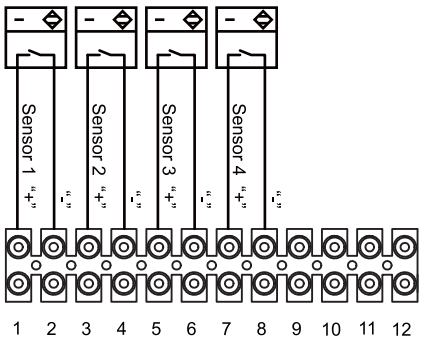

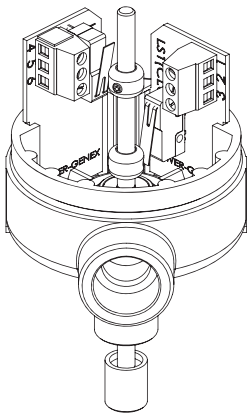

Linear valve position monitor

Features

- Weatherproof to IP66
- Easy to mount and compact for angle seat valve or diaphgram valve

Specifications

	LSB-2000
Protection Class	IP66
Specfifcations of Switches	2 x SPDT (250 VAC @ 10.1A)
Linear Operating Stroke	8 ~ 30mm
Operating Temperature	-20 ~ +60℃ (-4 ~ +140°F)
Electrical connections	PF 1/2
Body material	PA
Weight	0.5 kg

How to Order

LSB-2000 - Stroke "A" - Mounting Threads "B" - Feedback Shaft Length "C"

Description	Code
Stroke (A) :	On request (8mm ~ 30mm)
Mounting Threads (B):	On request (Ex. M30 x 2.0)
Feedback Shaft Length (C):	On request

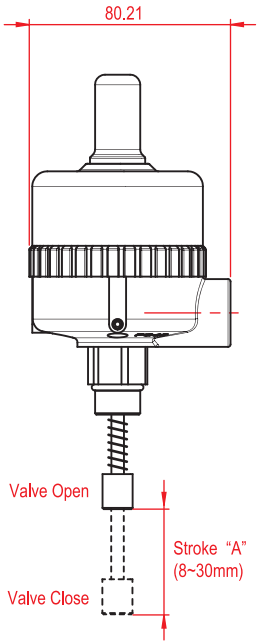

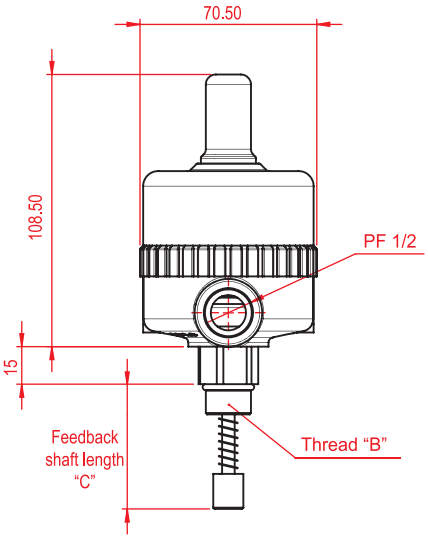

< SPDT Mechanical Switch - OMRON >

Technical Data	
Switch type	SPDT (Form C)
Contacts	Silver-plated
Approvals	UL, CSA
Electrical Rating	10.1 Amps / 250 VAC
Operating Temp.	-25 ~ +85℃

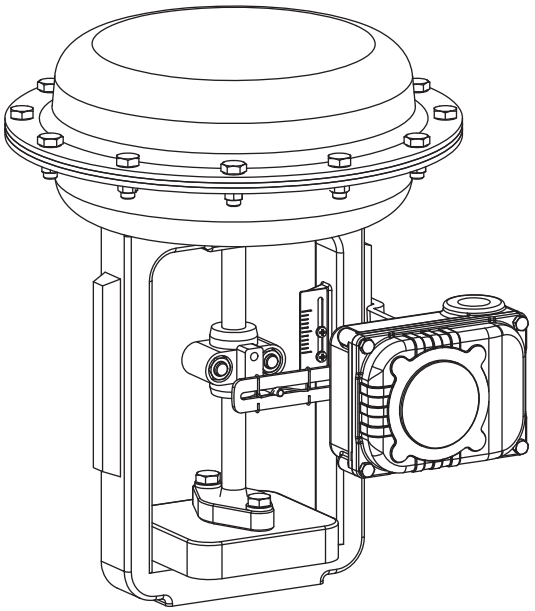

< Linear type - LSB-1000 >

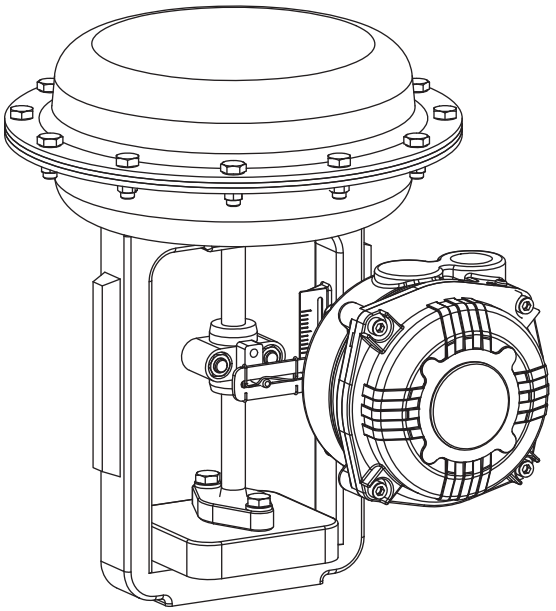

< Linear type - LSB-3000 >

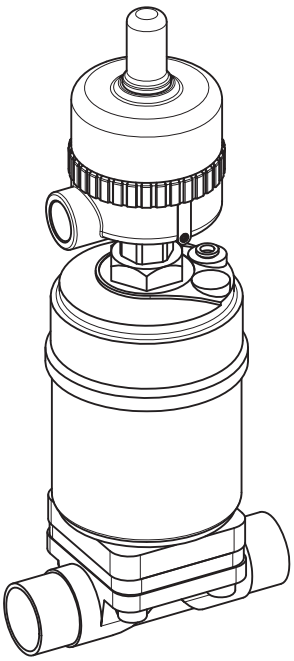

< Linear type - LSB-2000 >

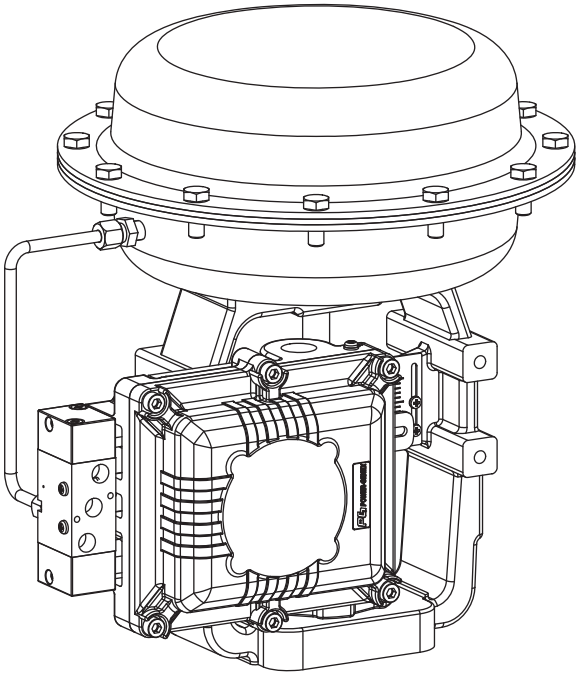

< Linear type - LSB-7000 >

Solenoid Valve

ESV-S
(5/2 way)

ESV-SS
(SS316 valve body)

ESV-SC
(SS316)

ESV-3
(3/2 way)

ESV-3S
(SS316 valve body)

ESV-31
(3/2 way)

Features

- Flameproof ATEX / IECEx / KC Ex d IIC
- Rugged aluminum die-cast housing
  or optionally stanless steel 316 valve body
- Converible form 5/2 way to 3/2 way
- Rotatable valve head for optimal mounting
- Direct NAMUR mounting or screw mounting

Mounting

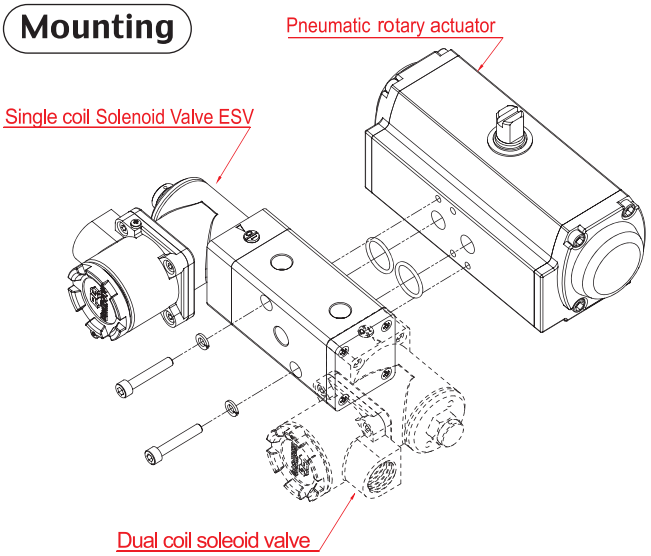

POWER-GENEX®

POWER-GENEX LTD.
99, Eunbong-ro, Namdong-gu,
Incheon 405-848 Korea
Tel : +82-32-812-6644
Fax : +82-32-812-6645
Website : http://www.powergenex.com
E-mail : sales@powergenex.com (overseas sales)
sales2@powergenex.com (domestic sales)